Heliroma®

REFERENCE PROJECTS

REFERENCE PROJECTS

HOTEL B&B GUIMARÃES

Portugal

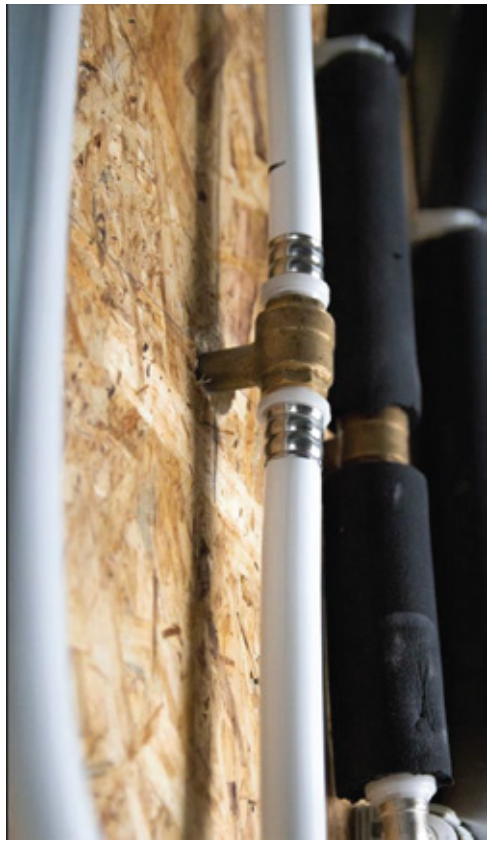

REFERENCE PROJECTS

HOTEL RENAISSANCE PARK

Portugal

A'TOWER

Portugal

BAYVIEW HORIZON CASCAIS

REFERENCE PROJECTS

VALENCIA AIRPORT

Spain

UTE RESIDENCIA MIQUEL MIR

HOTEL SILKEN MAGIC PARK

REFERENCE PROJECTS

TENERIFE AIRPORT

Spain

REFERENCE PROJECTS

BURGER KING GRAN CANARIA

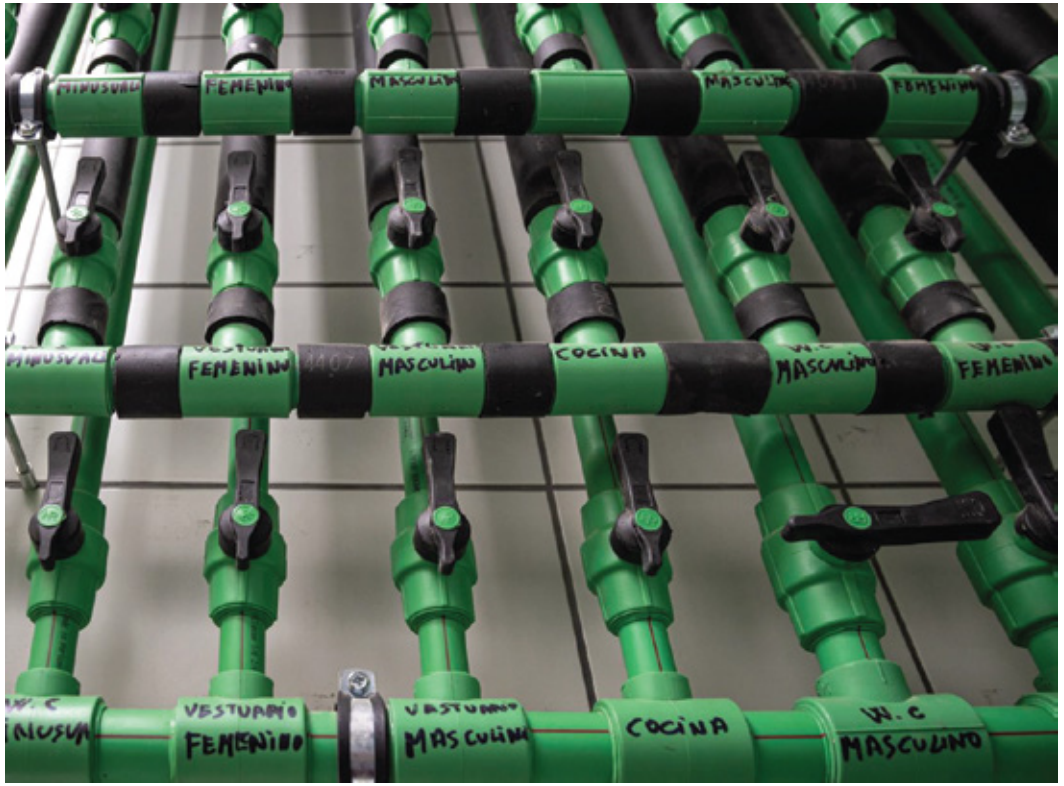

Spain

REFERENCE PROJECTS

CORDIAL MAGEC TAURITO APARTMENTS

Spain

REFERENCE PROJECTS

FONTÁN BUILDING – CITY OF CULTURE

Spain

VILLAVICIOSA DE ÓDON RESIDENCE

Spain

SANTAFÉ SHOPPING CENTER

Colombia

REFERENCE PROJECTS

HAVEN RESIDENCES

UAE

AL ANDLUS TOWERS

Saudi Arabia

PROCARE HOSPITAL

Saudi Arabia

REFERENCE PROJECTS

RELAXO HOTEL

UAE

LA RIVIERA ESTATES Dubai

UAE

TOWN HOUSE VILLAS Dubai

UAE

REFERENCE PROJECTS

MARINA CASABLANCA

Morocco

ROYAL PALM

Morocco

PISCINE SEMI OLYMPIQUE

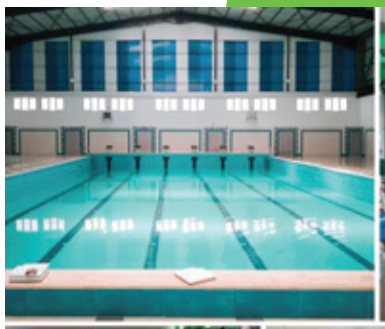

Algeria

REFERENCE PROJECTS

MOROCCO MALL

THE ROYAL PALM Marrakech

SOFITEL Marrakech

Morocco

REFERENCE PROJECTS

AL SABAH HOSPITAL

Kuwait

KUWAIT CANCER CENTRE HOSPITAL

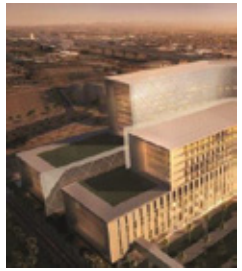

AL ADAN HOSPITAL

REFERENCE PROJECTS

INTERNATIONAL BANK - Jleeb Shuyukh

INTERNATIONAL BANK - Al Ahmadi

AMERICAN CREATIVITY SCHOOL

Kuwait

REFERENCE PROJECTS

AMERICAN UNIVERSITY SCHOOL

TENNIS COURT PROJECT

UNIV. TEACHERS ACCOMODATION - Shuwaikh

Kuwait

REFERENCE PROJECTS

THE CUBE

SAWABER TOWER SHUWAIKH

FARWANIYA HOSPITAL

Kuwait

REFERENCE PROJECTS

OZGUL THERMAL AFYON

NUROL LIFE PROJECT

ISTINNYE PARK ISTANBUL

Turkey

REFERENCE PROJECTS

OTTOMAN PALACE Antakra

MARRIOT HOTEL Antakra

ALMIRA HOTEL - Bursa

Turkey

REFERENCE PROJECTS

RESORT PALM SPA

Jordan

EMIRATE BEACH RESORT Spa

Oman

SAFIR AL SAYEDAH ZEINAB

Syria

REFERENCE PROJECTS

Y OFFICE TOWER

GIARDINO VILLAGE RESIDENCIAL

FLORESTA GARDENS RESIDENTIAL COMPOUND

Qatar

REFERENCE PROJECTS

SPOT T MALL TAYOUNEH

SANA BUILDING - BEIRUT

Lebanon

REFERENCE PROJECTS

VILLA KENARIT

BAABDA LOT 1118

RIHANYE 4892+4893

Lebanon

HELIROMA Worldwide

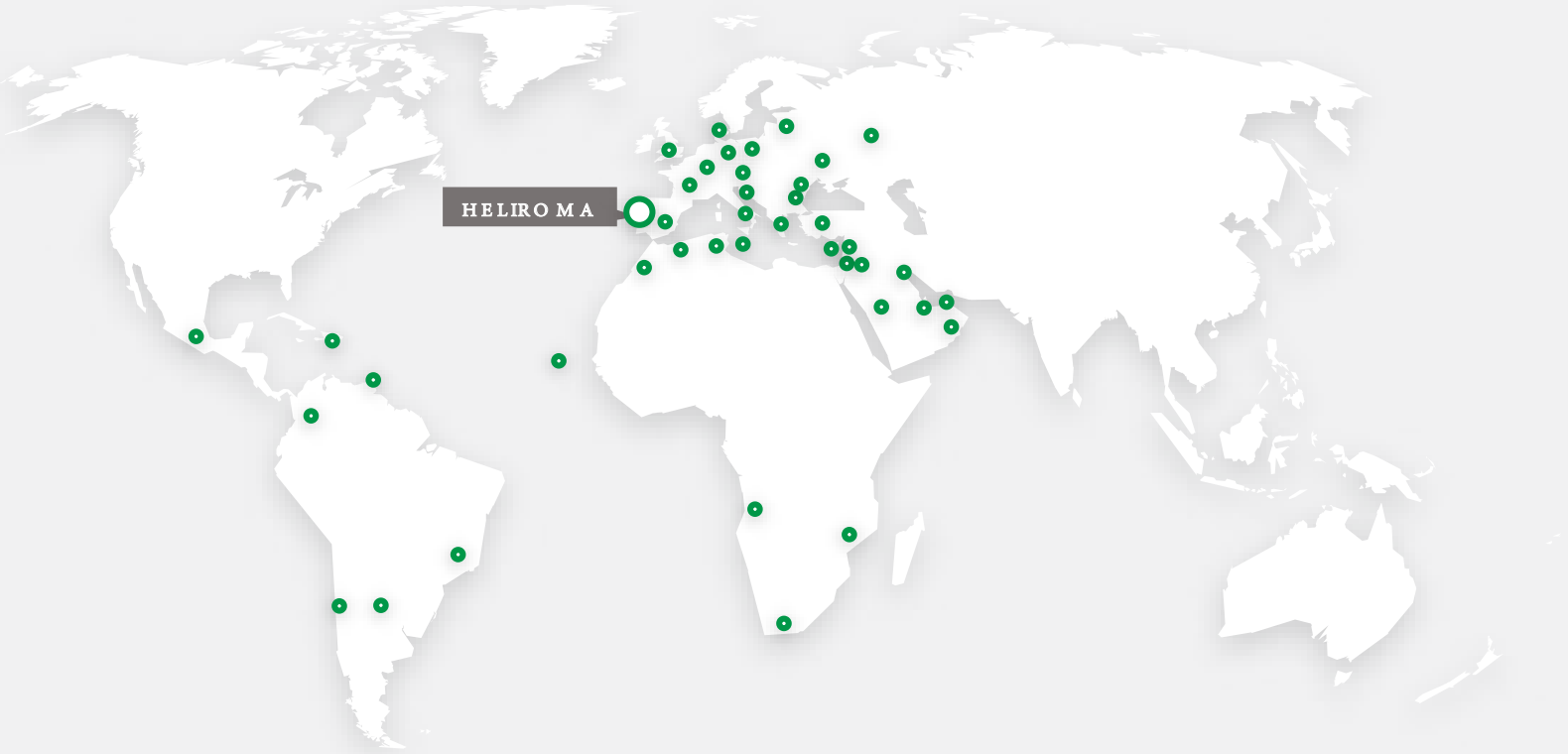

✓ 4 continents

✓ + 30 countries

Heliroma

Heliroma

www.heliroma.pt

TECHNICAL CATALOGUE

Heliroma®

Heliroma®

CORPORATE 0

HISTORY

Since our founding in 1996 in Arrifana, HELIROMA has become synonymous with quality and excellence in thermoplastic piping solutions. Initially focused on manufacturing high and low-density polyethylene pipes for the construction and agriculture industries, the company has continuously expanded its product offerings to address the evolving demands of modern infrastructure projects.

Today, HELIROMA is recognized for its comprehensive portfolio, which includes cutting-edge PP-R systems, durable multilayer pipes - PE-RT/AL/PE-RT - for water supply and HVAC systems, as well as specialized fire protection solutions - RED FIRE, heating and radiant floor systems - PE-Xa and PE-RT. Every product is meticulously engineered to comply with the most stringent international standards, ensuring superior reliability and optimal performance in complex and large-scale projects.

Our commitment to environmental stewardship is integral to our operations. Through the ongoing optimization of manufacturing processes, we significantly reduce energy consumption and waste generation, reinforcing our dedication to sustainable practices while maintaining the high-performance standards our industry demands.

With nearly three decades of expertise, HELIROMA's team works in close collaboration with global industry leaders to develop innovative, cost-effective solutions tailored to the complexities of contemporary construction. Our reach extends across over 30 countries, and as part of the Huliot Group, our solutions are available in more than 60 countries worldwide.

This global presence and commitment to excellence underpin our reputation as an industry leader. By delivering reliable, high-performance piping systems, we continuously strengthen our strategic partnerships with clients, fostering long-term trust and consistent, superior results.

At HELIROMA, we remain steadfast in our mission to provide advanced, resilient piping solutions that serve as the backbone for critical infrastructure in the Water and Construction sectors, powered by our technical expertise, unwavering commitment to sustainability, and comprehensive support and training services.

MARKETS

HELIROMA aim for a long-term cooperation in partnership with our customers. The declared aim of this is to serve them in an optimum manner, with respect to reliability and quality products.

HELIROMA is proud of the long-standing trusting partnerships and the strong international network of customers and be present in 4 continents, more than 30 countries.

From Portugal, to the whole world. HELIROMA will always continue to innovate and develop, and bring new products to the market place.

MISSION, VISION AND VALUES

MISSION

To offer quality products and excellent services to its clients, providing added value, comfort and trust to the end consumer.

VISION

To become a unique reference on the national and international markets, consolidating long-lasting relationships with clients, suppliers and employees.

VALUES

- Achieving goals together;
- Passion to Lead;
- Humility;
- Obligation to our community and environment;
- Integrity and role modeling;
- Professionalism.

INNOVATION

Innovation and Efficiency in Water Supply

Water, one of the most precious resources on our planet, has always been a cornerstone in the evolution of human infrastructure. In recent years, the way we design water supply systems has evolved to embrace a new era of innovation and sustainability. Today, as we discuss the importance of improving efficiency and reducing waste, the future of piping systems promises to be even more fascinating.

Over the years, water supply projects have been developed with a focus on preventing leaks, ensuring efficient maintenance, and applying treatments to guarantee water quality. Nowadays, with the technological advancements, we are entering an era where innovation is no longer limited to corrective solutions; it is shaping the very structure and functionality of piping systems.

Smart Piping and Real-Time Monitoring

Imagine a piping system that "feels" the water conditions, the pressure and the flow in real-time. Thanks to the integration of smart sensors, this is already possible. These sensors allow for continuous monitoring of the infrastructure, quickly detecting any leaks or blockages in the pipes. Interventions, which could have taken days before, now are instantaneous, minimizing losses and improving operational efficiency.

Water Quality: Monitoring and Precision in Treatment

Water quality is another essential vector for the future of infrastructures. Sensors dedicated to monitoring water quality go beyond simply detecting impurities and contaminants. In addition to traditional filtration systems, new water quality treatment devices have the ability to precisely adjust the dosing of disinfectants, ensuring not only potable water but also prolonging the lifespan of the pipes and their components.

Innovative Coatings: Protection and Sustainability

With focus on sustainability and the durability of water supply systems, there are companies working on innovative materials that protect pipes from both the wear and tear caused by abrasive products, as well as from chemical attacks caused by disinfectants used in water treatment. Furthermore, the search for environmentally friendly and recyclable is growing, aligning technological needs with environmental concerns.

The Future: Self-Regenerating Piping

Imagine a piping system capable of self-repair. Pipes that, when detecting cracks, damages, or blockages, activate an internal solution to automatically resolve the issue without the need for manual intervention. The use of innovative polymers and self-correcting systems embedded in the water supply system could transform the future of piping, making them more resilient, self-sustaining, and efficient.

Conclusion: A Promising and Sustainable Future

As technologies continue to evolve, water supply systems will not only become more efficient but also more resilient and sustainable. The development of smart piping, with monitoring sensors, innovative coatings, and self-regenerating systems, is transforming the way we manage our water resources.

The future of water will undoubtedly be more technological, sustainable, and above all, smarter.

QUALITY

Quality continues to be the pillar of HELIROMA's success.

Through the fulfilment of our customers' quality standards and requirements, we ensure their satisfaction with our products and services.

HELIROMA apply quality standards and working guidelines that are valid and recognised worldwide.

HELIROMA invests heavily in the areas of Quality, Personnel Training, as well as in the Certification of the company and its products. We are certified according to EN ISO 9001:2015 by AENOR and IQNET. The high-quality standard allows a 10-year warranty on all products that we manufacture.

All HELIROMA's products passes through a demanding and rigorous analysis and respective production tests, in order to guarantee the product conformity. To complete analyses several tests are carried out in third party laboratories with international recognition.

Being certified with several product approvals means that we are visited many times a year from each certification Institute, and that production is constantly monitored.

This success is another step towards strengthening our competitive position at market.

QUALITY CONTROL PROCESS

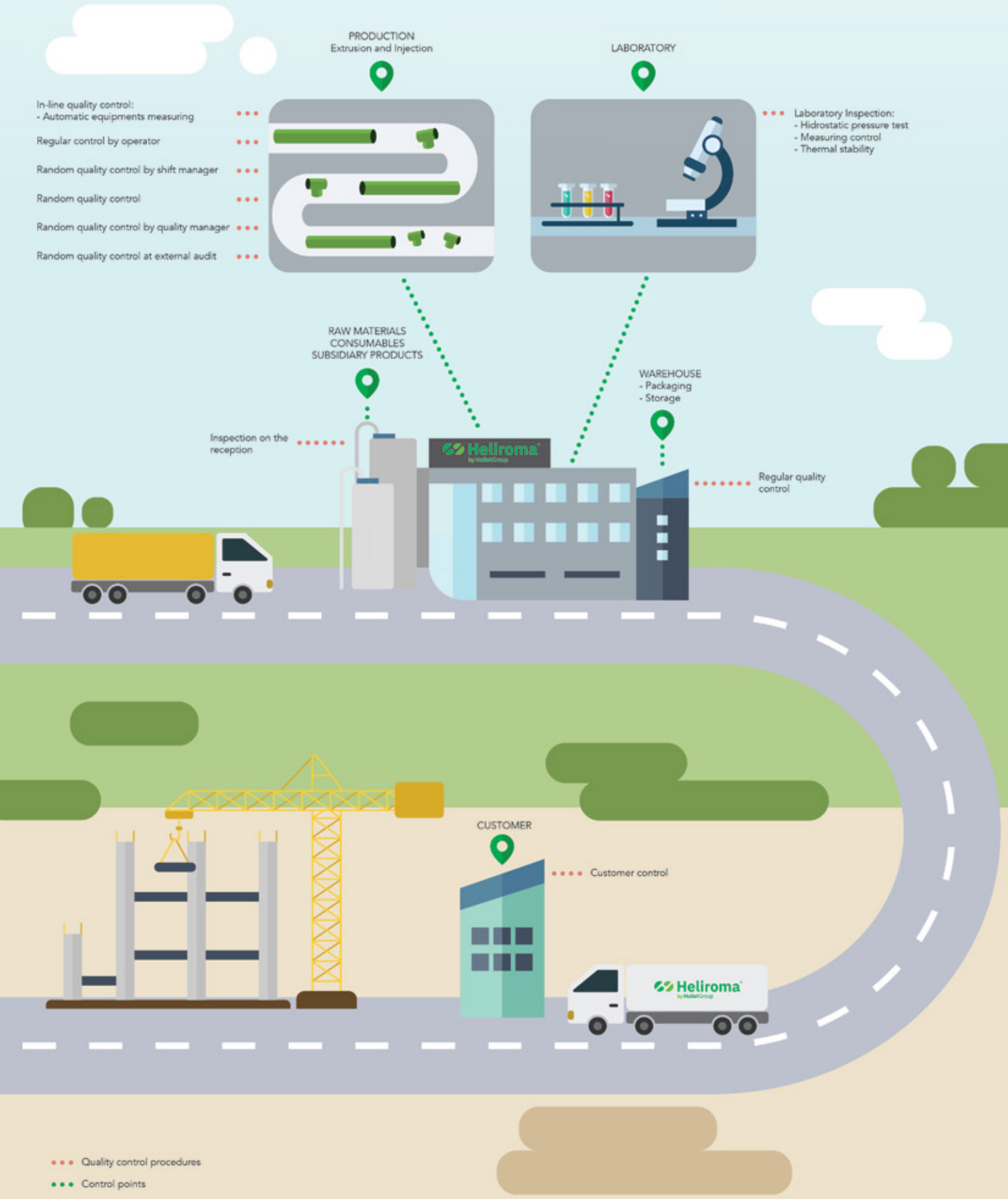

QUALITY MANAGEMENT POLICY

The Executive Management of HELIROMA assumes and is committed to a set of principles that are part of the **management policy**, considering fundamental to the evolution and success of HELIROMA:

- **Improvement** of its quality management system, its **products** and **services** to meet the needs and expectations of its customers, but also of the other relevant stakeholders, without losing sight of the growth of the business, to continue to ensure the necessary return to its prosperity.

- Evolution of **people**, as an essential factor of their existence, promoting the professional development of their employees and ensuring the adequacy of their skills to the functions they perform;

- Guarantee of the **quality of the products**, which must always be better;

- Preserving the **environment**, controlling and managing all production waste, in accordance with applicable legislation and regulations;

- Profit as a final measure of efficiency and as a necessity for the **growth** of HELIROMA.

- Commitment to providing **safe products**, which satisfy the requirements of customers and which comply with the applicable legal, normative, statutory and regulatory requirements.

CERTIFICATIONS

National and international independent authorities and institutions confirm HELIROMA's quality standard.

SUSTAINABILITY

Sustainability and ecological responsibility play a key role with all entrepreneurial decisions and in the entire value chain.

The **consumption of water** in each home from drinking water to heating, requires due attention when creating the most sustainable solutions. When talking about topics such as corrosion, energy efficiency, durability and the quality of the water consumption, the choice of the pipes and fittings in each building is essential.

All HELIROMA's production processes and products are aligned with the guidelines of sustainability and **energy efficiency**, meeting the ecological and environmental standards required or recommended today, allowing the choice to be evident.

HELIROMA's systems have a **life expectancy of more than 50 years**, rarely needing extensive maintenance or repairs, and do not generate waste discharge.

In addition, polypropylene and polyethylene are an environmentally friendly material, are fully recyclable and can be reused in other applications and in different areas.

HELIROMA takes responsibility in creating a **sustainable supply chain**. Maximizing the efficiency of supplier logistics, makes an important contribution to our controlled carbon footprint.

HELIROMA contributes daily to the design and development of construction projects and is committed to support the construction industry to create the **least environmental impact**.

Sustainability is a driving force within HELIROMA's strategy.

EPD

0.

Climate change is a critical global challenge, primarily driven by CO_2 emissions that exacerbate the greenhouse effect, leading to global warming. The increasing demand for energy, alongside soil and water acidification, is pressing concerns, with significant consequences for ecosystems, including flora, fauna, and human health. In response, organizations worldwide are prioritizing action. Notably, the United Nations' "2030 Agenda for Sustainable Development" outlines key climate protection strategies.

The construction sector, which accounts for 36% of global energy consumption and 39% of energy-related CO2 emissions, is also focusing on sustainability. The use of sustainable products is essential for minimizing environmental impact. Environmental Product Declarations (EPDs) offer the necessary data to assess a product's environmental performance accurately.

1.

An Environmental Product Declaration (EPD) provides a comprehensive assessment of a product's environmental impact throughout its entire life cycle, from raw material extraction to disposal. It quantifies resource consumption, emissions, and other environmental effects, enabling the comparison of different products. The EPD adheres to internationally recognized standards, such as ISO 14025 and EN 15804, and is verified by independent third parties to ensure the accuracy, completeness, and compliance of the data.

It's important to note that an EPD is not a certification but a standardized tool to transparently present environmental data. While it defines the data's quality and format, it does not assess the product's quality itself. In the construction sector, EPDs are essential for the ecological evaluation of buildings and for making informed decisions about sustainable materials.

2.

The Life Cycle Assessment (LCA) aims to provide detailed environmental data on products, identifying potential impacts and supporting decision-making. It evaluates the entire life cycle of a product, from raw material extraction to disposal, measuring resources, energy, water, and emissions involved.

An LCA study consists of four phases: 1) Goal and scope definition, determining the purpose and the product to be analysed; 2) Life Cycle Inventory (LCI), collecting and quantifying environmental data; 3) Impact assessment, analysing the environmental impacts; 4) Interpretation, integrating results and providing conclusions and recommendations.

International standards ISO 14040:2006 and ISO 14044:2006 provide guidelines for conducting LCA.

3.

Life Cycle Assessments (LCA) are essential tools for understanding the full environmental impact of a product or service. Under EN 15804+A2, LCAs provide a comprehensive framework that requires the reporting of 13 core Environmental Impact Indicators (EIIs) for an Environmental Product Declaration (EPD), with an additional 6 optional indicators. These indicators offer a detailed insight into how a product interacts with the environment at every stage of its life cycle.

A critical aspect of LCAs is the measurement of impacts in equivalents. For instance, Global Warming Potential (GWP) is quantified in CO2 equivalents, encompassing not only carbon dioxide but also methane and nitrous oxide, which together contribute to climate change. The assessment extends beyond emissions, accounting for the consumption of renewable and non-renewable energy, water usage, and various waste streams, including non-hazardous waste disposed (NHWD) and materials for recycling (MFR).

This rigorous methodology ensures that organizations gain a holistic understanding of their environmental footprint, enabling data-driven decisions that prioritize sustainability.

Environmental Product Declarations (EPDs) provide a robust foundation for assessing the environmental impact of products, enabling architects, planners, contractors, investors, facility managers, and companies to make informed, strategic decisions that prioritize sustainability and drive long-term environmental performance.

Environmental Product Declarations (EPDs) are crucial—both for the construction industry, for our operations, and for our customers. Our EPDs are available for the following product groups:

- PP-R: Helisytem, Romafaser, Romaklima, Romafaser CT, Romaklima CT;
- RED FIRE;
- Multilayer: Heliklima Klimapress, Klimapress PPSU LP;
- Ultra Silent.

EPD®

PP-R

1

PP-R SYSTEM

- PP-R 100, PP-R 100 + FG, PP-RCT 125 + FG
- PP-R 100 - HELISYSTEM
- PP-R 100 + FG - ROMAFASER & ROMAKLIMA
- PP-RCT 125 + FG - ROMAFASER CT & ROMAKLIMA CT

INSTALLATION GUIDELINES

WELDING TECHNOLOGY

SYSTEM FEATURES

SYSTEM GENERAL ADVANTAGES

CERTIFICATIONS

PRODUCT RANGE

- PP-R pipes
- PP-R fittings
- Electrofusion fittings
- Fittings for electrofusion
- PP-R Tools

PP-R SYSTEM

PP-R 100 | PP-R 100 + FG | PP-RCT 125 + FG

CHARACTERISTICS

- APPROVED FOR DRINKING WATER
- DISINFECTION RESISTANT
- ANTIMICROBIAL
- LEGIONELLA CONTROL
- SUITABLE FOR HEATING SYSTEMS
- 100% RECYCLABLE
- ECO-FRIENDLY

PLASTIC PIPES CLASSIFICATION

SDR Standard dimension ratio – ratio between pipe's outside diameter and it's wall thickness

$$SDR = \frac{d_e}{e}$$

S Series - dimensionless index, which is used for the calculation of the wall thickness of the pipe

$$S = \frac{d_e - e}{2e}$$

d_e Outside diameter of the pipe

e Wall thickness of the pipe

MATERIAL

PP	Polypropylene
PP-R	Polypropylene Copolymer Random
PP-R 100	Polypropylene Copolymer Random 100
PP-RCT 125	Polypropylene Copolymer Random with modified crystallinity 125
FG	Fiberglass

PRODUCT RANGE OVERVIEW

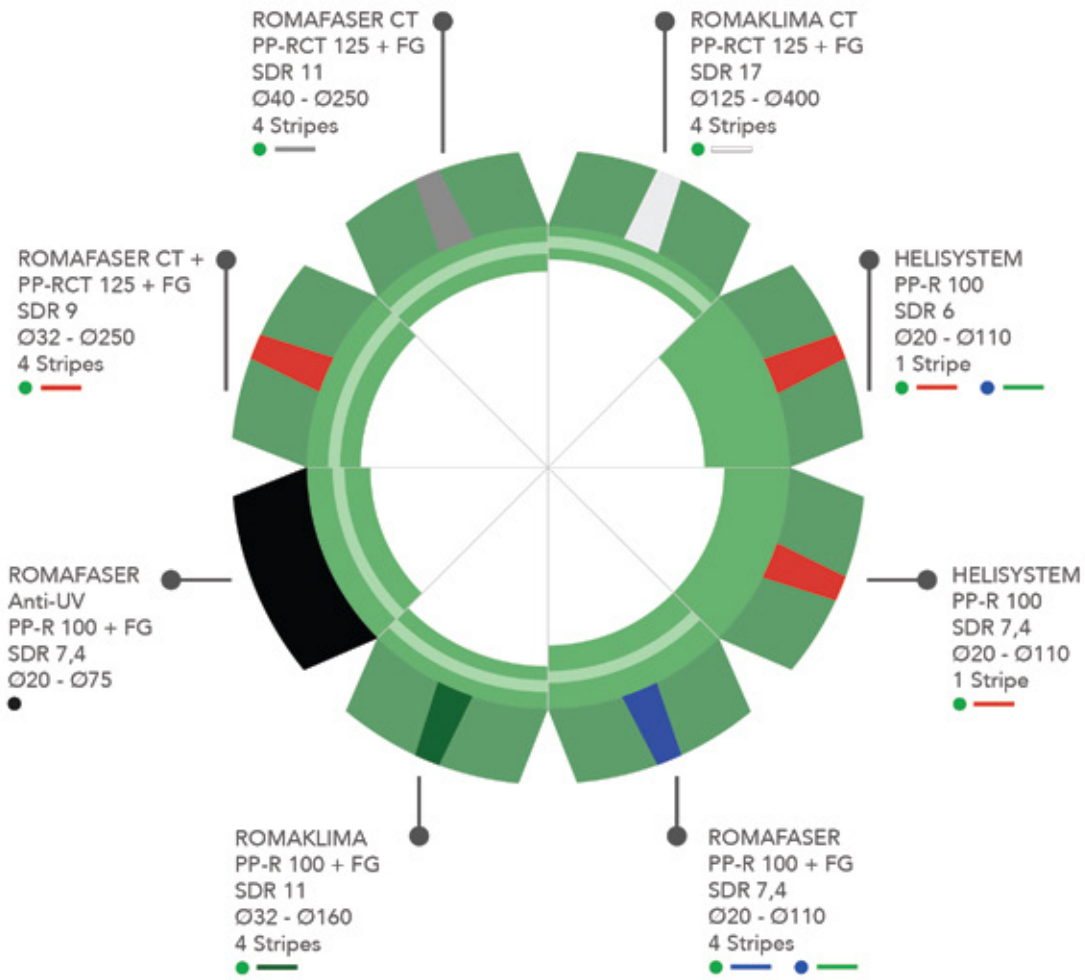

HELIROMA PP-R PIPES

DIAMETERS (mm)	20	25	32	40	50	63	75	90	110	125	160	200	250	315	355	400
HELISYSTEM PP-R 100 SDR 6	✔	✔	✔	✔	✔	✔	✔	✔	✔							
HELISYSTEM PP-R 100 SDR 7,4	✔	✔	✔	✔	✔	✔	✔	✔	✔							
ROMAFASER PP-R 100 + FG SDR 7,4	✔	✔	✔	✔	✔	✔	✔	✔	✔							
ROMAKLIMA PP-R 100 + FG SDR 7,4	✔	✔														
ROMAKLIMA PP-R 100 + FG SDR 11			✔	✔	✔	✔	✔	✔	✔	✔	✔					
ROMAFASER ANTI-UV PP-R 100 + FG SDR 7,4 ANTI-UV	✔	✔	✔	✔	✔	✔	✔									
ROMAFASER CT PP-RCT 125 + FG SDR 7,4	✔	✔	✔													
ROMAFASER CT+ PP-RCT 125 + FG SDR 9			✔	✔	✔	✔	✔	✔	✔							
ROMAFASER CT PP-RCT 125 + FG SDR 11				✔	✔	✔	✔	✔	✔	✔	✔	✔	✔			
ROMAKLIMA CT PP-RCT 125 + FG SDR 17										✔	✔	✔	✔	✔	✔	✔

Notes:

Pipes ø 20 - 125 mm → socket welding;

Pipes ø 160 - 400 mm → butt welding;

Other colours or dimensions available on demand.

PP-R SYSTEM

PP-R 100 - HELISYSTEM

PP-R 100

Polypropylene is a versatile polymer present in our lives. It is a polymer made from a simple carbon-carbon and carbon-hydrogen bond.

It is obtained through the polymerisation of propylene, in the presence of catalysts under certain pressure and temperature conditions.

Polypropylene copolymer random is characterised by its high molecular weight and resistance to high operating temperatures and pressure, ensuring strength and long lifecycles. Making it suitable for pipe production.

HELISYSTEM - PP-R 100 SDR 6 | PP-R 100 SDR 7,4

The polypropylene used in HELISYSTEM pipes and fittings is classified as PP-R 100, with a mechanical resistance stress (MRS) 10.0 MPa, not 8.0 MPa the standard PP-R.

The PP-R 100 is the latest development in PP-R family, complying with reference curves simultaneously at 20°C, 70°C, 95°C and 110°C based on third party testing and ISO/TR 9080 assessment.

The PP-R 100 monolayer system includes pipes with different thicknesses - SDR 6, SDR 7,4 and more than 250 fittings and connection elements such as valves and ball valves to complete the system.

HELISYSTEM SDR 6 is supplied in green or blue colour with 1 longitudinal red or green line, respectively.

HELISYSTEM SDR 7,4 is supplied in green colour with 1 longitudinal red line.

PP-R 100

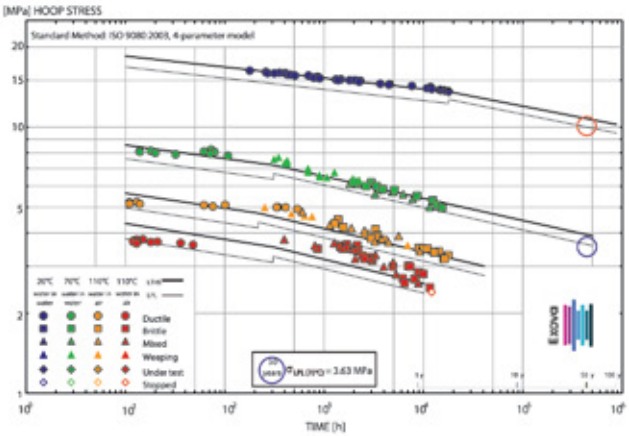

50 years σ_{LPL} 10.02 MPa
MRS = 10 MPa

PP-R 80

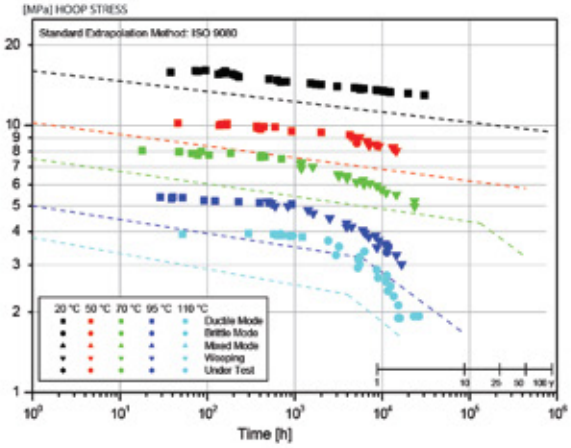

50 years σ_{LPL} 9.58 MPa
MRS = 8.0 MPa

PP-R 100: RAW MATERIAL AND PIPES PROPERTIES

PARAMETER	VALUE	STANDARD
PHYSICAL		
Density	897 kg/m³	ISO 1133
MFI 230°/2,16 kg	0,3 g/10min	ISO 1133
MFI 230°/5,00 kg	1,3 g/10min	ISO 1133
MFI 190°/5,00 kg	0,5 g/10min	ISO 1133
Viscosity	420 mL/g	ISO 1628-3
Roughness	0,007 mm	ISO 5436
Pipe Constant	20	
Opacity	Yes	ISO 7686
MECHANICAL		
Tensile Modulus (23°C)	850 MPa	ISO 527
Tensile Stress at Yield	24 MPa	ISO 527
Tensile Strain at Yield	13%	ISO 527
Tensile Creep Modulus 1h	650 Mpa	ISO 899
Tensile Creep Modulus 1000h	350 MPa	ISO 899
Flexural Stress at 3,5% Deflection	20 MPa	ISO 178
MRS	10.0 MPa	ISO 9080
THERMAL		
Thermal Conductivity	0,135 W/mK	DIN EN ISO 8497
Thermal Expansion Coefficient	0,150 mm/m°C	VDE 0304
Vicat Softening Temperature (A50)	132°C	ISO 306
Vicat Softening Temperature (B50)	69°C	ISO 306
DSC Melting Point	139°C	DSC
CLTE	0,00015 cm/cm/°C	ISO 11359
OIT	40 min	ISO 11357
Fire Classification	B2	DIN 4102
IMPACT		
Charpy Impact Strength Unnotched 23°C	No break	ISO 179
Charpy Impact Strength Unnotched 0°C	No break	ISO 179
Charpy Impact Strength Unnotched -20°C	43 KJ/m²	ISO 179
Charpy Impact Strength Notched 23°C	89 KJ/m²	ISO 179
Charpy Impact Strength Notched 0°C	12 KJ/m²	ISO 179
Charpy Impact Strength Notched -20°C	2,7 KJ/m²	ISO 179
HARDNESS		
Ball Indentation Hardness (H 132/30)	45 MPa	ISO 2039
Shore Hardness (shore D)	65	ISO 868
ELECTRICAL		
Specific Surface Resistivity	10^{14} Ω	IEC 93
Specific Resistance	> 10^{17} Ω cm	
Relative Permittivity	2,3 (in case of 1 MHz)	
Puncture Voltage	500 kV/cm	
Dissipation Coefficient	0,0002 (in case of 50 Hz)	

ADVANTAGES AND KEY FEATURES OF HELISYSTEM

- LONG LIFE EXPECTANCY
- EXCELLENT LONG-TERM PRESSURE RESISTANCE
- LOW PRESSURE LOSS
- LOW THERMAL CONDUCTIVITY
- ECO-FRIENDLY
- CORROSION RESISTANT
- HIGH CHEMICAL RESISTANCE
- LOW ROUGHNESS
- DRINKABLE WATER APPLICATIONS
- EXTREMELY RELIABLE
- PREVENTS LIMESCALE
- ACOUSTIC INSULATION
- EASY AND FAST INSTALLATION
- SUPPLIED IN BARS
- IDEAL FOR OFFSET CONSTRUCTION
- NATIONAL AND INTERNATIONAL CERTIFICATIONS

APPLICATIONS

HELISYSTEM PP-R 100 SDR 6 and SDR 7,4 has a wide range of applications, as well as working pressures and temperatures such as: new installations, repairs, renovations and prefabricate installations.

This system is suitable for applications including: drinking water installations, sanitary systems, hot and cold water distribution, heating and cooling systems, district heating, community systems, industrial applications. In specific applications, HELIROMA should be consulted.

The EN ISO 15874 PP-R define four classes of application, with a specific combination of working pressure and temperature. In the table below is shown the working pressure and temperature for PP-R SDR 6 and PP-R SDR 7,4 pipes, according to the standard.

APPLICATION CLASS		P_D (bar)	
		PP-R SDR 6 S2.5	PP-R SDR 7,4 S3.2
1	Hot water supply 60°C	10	8
2	Hot water supply 70°C	8	6
4	Underfloor heating and low temperature radiators	10	10
5	High-temperature radiators connection	6	6

PP-R 100
has a better performance than traditional PP-R 80

PIPE MARKING

The following sequence must be printed once per meter in all pipes.

Example:

HR HELIROMA HELISYSTEM EN ISO 15874-2 AENOR 001/621 DVGW DW-8317CU0307 Certif WRAS ICECON 016-05/3800-2019 QB-166-1851 14/13-1851 (Classe 2/6 bar 70ºC)-(Classe 4/10 bar 60ºC) 50 years DIN 8077/8078 GERMANY standards opaco PP.R d_e x e - A PN20 SERIE 2,5 SDR 6 CLASSE 1/10 2/8 4/10 5/6 bar L DD/MM/YYYY HH:MM NºOP Made in Portugal

MARKED SYMBOL	DESCRIPTION
HR Heliroma	Manufacturer's name
Helisystem	Product trade mark
EN ISO 15874-2	Product standards
AENOR, DVGW, Certif, WRAS, ICECON, QB	Certificates, approvals
Opaco	Opacity
PP-R 100	Material
d_e x e	Nominal outside diameter x nominal wall thickness
A	Pipe dimension class (according EN ISO 15874)
PN20	Nominal pressure
S 2.5	Pipe series S
SDR 6	SDR of the pipe
CLASSE 1/10 2/8 4/10 5/6 bar 50 years	Application class combined with operating pressure (according EN ISO 15874)
L	Machine number
DD/MM/YYYY HH:MM	Date of manufacture
N°OP	Production order number
Made in Portugal	Additional information

DIMENSIONS AND FLOW RATE

PIPE	DN	Wall Thickness (mm)	Speed (m/s)	Flow Capacity		
				m^3/h	L/s	L/h
HELISYSTEM PP-R 100 SDR 6 S2.5	20	3,4	2	0,985	0,274	985
	25	4,2		1,558	0,433	1558
	32	5,4		2,542	0,706	2542
	40	6,7		4,001	1,111	4001
	50	8,3		6,308	1,752	6308
	63	10,5		9,975	2,771	9975
	75	12,5		14,137	3,927	14137
	90	15		20,358	5,655	20358
	110	18,3		30,466	8,463	30466
HELISYSTEM PP-R 100 SDR 7,4 S3.2	20	2,8	2	1,173	0,326	1173
	25	3,5		1,832	0,509	1832
	32	4,4		3,044	0,845	3044
	40	5,5		4,756	1,321	4756
	50	6,9		7,410	2,058	7410
	63	8,6		11,862	3,295	11862
	75	10,3		16,735	4,649	16735
	90	12,3		24,187	6,719	24187
	110	15,1		36,010	10,003	36010

PERMISSIBLE WORKING PRESSURE

Potable water applications - open systems in permanent operation

TEMPERATURE (°C)	PERMISSIBLE WORKING PRESSURE (bar)		
	LIFETIME (years)	HELISYSTEM PP-R 100 SDR 6 S2.5	HELISYSTEM PP-R 100 SDR 7,4 S3.2
20	1	30,52	24,23
	5	28,65	22,78
	10	27,88	22,19
	25	26,95	21,42
	50	26,27	20,83
30	1	25,93	20,57
	5	24,31	19,30
	10	23,63	18,79
	25	22,78	18,11
	50	22,19	17,60
40	1	22,02	17,51
	5	20,57	16,32
	10	19,98	15,90
	25	19,21	15,30
	50	18,70	14,79
50	1	18,62	14,79
	5	17,34	13,77
	10	16,83	13,26
	25	16,15	12,84
	50	15,73	12,50
60	1	15,73	12,50
	5	14,62	11,56
	10	14,11	11,22
	25	13,60	10,80
	50	13,18	10,46
70	1	13,18	10,46
	5	12,24	9,69
	10	11,82	9,44
	25	10,29	8,16
	50	8,67	6,89

Safety factor - 1,5.

The referenced service lifetime does not consider installation changes, such as: high concentration of disinfection agents, metallic materials out of specification, neither operating temperature and/or pressure malfunctions.

For sanitary water installations, working pressures should be reduced by 15%, for the same service lifetime. The maximum allowable temperature is 70°C, which corresponds to thermal disinfection temperature and not to continuous operating temperature. Disinfection processes should be carried out according to mandatory regulations and under no circumstance a combination of different processes should be used.

In case of butt-welded pipes and/or fittings, allowable operating pressures should be reduced by 25%.

PP-R SYSTEM

PP-R 100 + FG - ROMAFASER & ROMAKLIMA

PP-R 100 WITH FIBERGLASS

HELIROMA developed a new family of pipes to increase maximum operating temperatures and improve overall performance, a faser pipe with 3-layers, a co-extrusion process.

The middle layer is a compound of fiberglass and PP-R 100, it is perfectly integrated in the pipe wall, the inner and outer layers remain unchanged and made of PP-R 100.

The fiberglass expands less than the PP-R when heated, remain rigid at hight temperature, thus increasing the stability of the pipe and reduced the linear expansion. The faser is less flexible and requires fewer and smaller expansion controls.

The low concentration of fiberglass in the pipe does not affect the welding process, the recycling, neither water quality, so all other aspects of installation and use remain the same as with monolayer PP-R pipes.

The faser composite pipes allows the improvement of the system without sacrificing any of the other advantages of the pipe.

The system with pipes supplemented by the especially reinforced fiberglass composite includes different types:

ROMAFASER – PP-R 100 + FG SDR 7,4

ROMAKLIMA – PP-R 100 + FG SDR 11

A complete system of fittings and connection elements such as valves and ball valves.

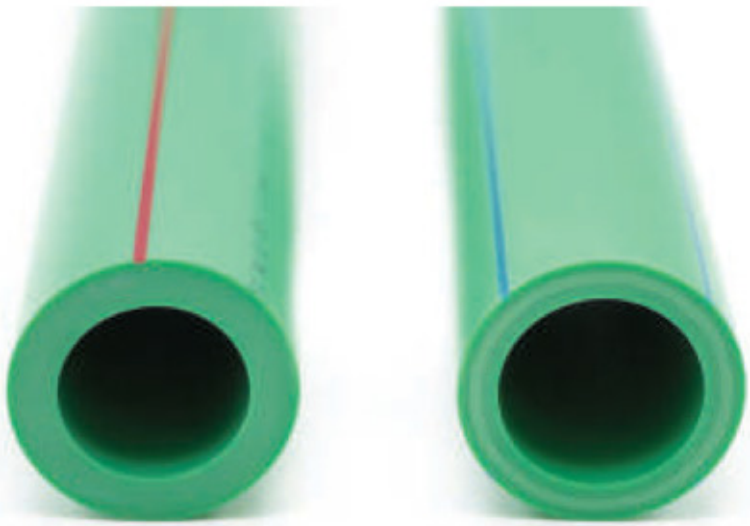

ROMAFASER – PP-R 100 + FG SDR 7,4

ROMAFASER PP-R 100 pipe with fiberglass SDR 7,4, combines chemical and physical safety with durability allowing the application in potable water installations, industrial applications and much more.

The pipe is supplied in green or blue colour with 4 longitudinal blue or green lines, respectively.

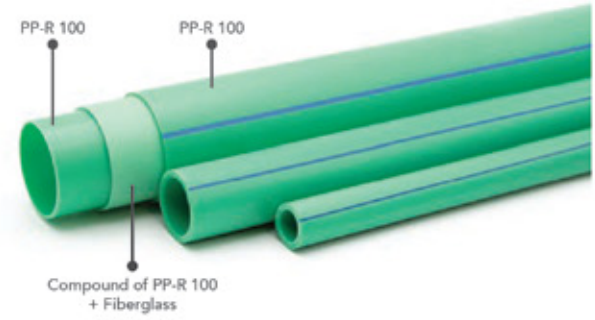

ROMAKLIMA – PP-R 100 + FG SDR 11

ROMAKLIMA PP-R 100 pipe with fiberglass SDR 11, which provides a balanced wall thickness to provide higher flow rates while maintaining high pressures. Suitable for most applications.

The pipe is supplied in green colour with 4 longitudinal dark green lines.

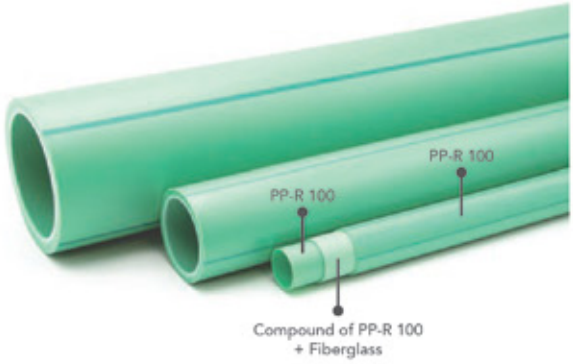

PP-R 100 + FG: PIPE PROPERTIES		
PARAMETER	VALUE	STANDARD
PHYSICAL		
Roughness	0,007 mm	ISO 5436
Pipe Constant	20	
Opacity	Yes	ISO 7686
THERMAL		
Thermal Conductivity	0,135 W/mK	DIN EN ISO 8497
Thermal Expansion Coefficient	0,035 mm/m°C	VDE 0304
OIT	40 min	ISO 11357
Fire Classification	B2	DIN 4102

ADVANTAGES AND KEY FEATURES OF ROMAFASER AND ROMAKLIMA

- INCREASED FLOW RATE DUE TO INCREASED INNER DIAMETER;
- REDUCED THERMAL EXPANSION
- FEWER SUPPORTS NEEDED
- LIGHTWEIGHT
- EXCELLENT LONG-TERM PRESSURE RESISTANCE
- LOW THERMAL CONDUCTIVITY
- LOW PRESSURE LOSS
- LOW ROUGHNESS
- ECO-FRIENDLY
- DRINKABLE WATER APPLICATIONS
- LONG LIFE EXPECTANCY
- CORROSION RESISTANT
- HIGH CHEMICAL RESISTANCE / STABILITY
- PREVENTS LIMESCALE
- ACOUSTIC INSULATION
- EASY AND FAST INSTALLATION
- SUPPLIED IN BARS
- SEVERAL NATIONAL AND INTERNATIONAL CERTIFICATIONS

APPLICATIONS

The ROMAFASER SDR 7,4 and ROMAKLIMA SDR 11 have a wide range of applications, as well as working pressures and temperatures such as: new installations, repairs, renovations and prefabricate installations.

This system is suitable for applications including: drinking water installations, sanitary systems, hot and cold water distribution, heating and cooling systems, district heating, community systems, industrial applications. In specific applications, HELIROMA should be consulted.

In the table below is shown the working pressure and temperature for ROMAFASER and ROMAKLIMA pipes, according to specific rules and requirements.

APPLICATION CLASS		P_D (bar)	
		ROMAFASER & ROMAKLIMA	
		PP-R 100 + FG SDR 7,4 S3.2	PP-R 100 + FG SDR 11 S5.0
1	Hot water supply 60ºC	10	6
2	Hot water supply 70ºC	8	4
4	Underfloor heating and low temperature radiators	10	6
5	High-temperature radiators connection	6	-

PIPE MARKING

The following sequence must be printed once per meter in all pipes.

Example:

HR HELIROMA ROMAFASER AENOR CC 001/691 WRAS ICECON 016-05/3800-2019 opaco (PP-R / PP-R +GF / PP-R) Ø 25x3,5 mm SDR 7.4 SERIE 3.2 CLASSE 1/8 2/6 4/10 5/6 bar DIN 8077 / 8078 GERMANY standards L DD/MM/YY HH:MM Nº OP Made in Portugal

MARKED SYMBOL	DESCRIPTION
HR Heliroma	Manufacturer's name
ROMAFASER	Product trade mark
AENOR, WRAS, ICECON	Certificates, approvals
Opaco	Opacity
PP-R / PP-R+GF / PP-R	Material
d_e x e	Nominal outside diameter x nominal wall thickness
SDR 7,4	SDR of the pipe
S 3.2	Pipe series S
CLASSE 1/8 2/6 4/10 5/6 bar	Application class combined with operating pressure
DIN 8077 / 8078 GERMANY standards	Product regulations
L	Machine number
DD/MM/YYYY HH:MM	Date of manufacture
N°OP	Production order number
Made in Portugal	Additional information

DIMENSIONS AND FLOW RATE

PIPE	DN	Wall Thickness (mm)	Speed (m/s)	Flow Capacity		
				m^3/h	L/s	L/h
ROMAFASER PP-R 100 + FG SDR 7,4 S3.2	20	2,8	2	1,173	0,326	1173
	25	3,5		1,832	0,509	1832
	32	4,4		3,044	0,845	3044
	40	5,5		4,756	1,321	4756
	50	6,9		7,410	2,058	7410
	63	8,6		11,862	3,295	11862
	75	10,3		16,735	4,649	16735
	90	12,3		24,187	6,719	24187
	110	15,1		36,010	10,003	36010
ROMAKLIMA PP-R 100 + FG SDR 11 S5.0	20	2,8	2	1,173	0,3257	1172,6
	25	3,5		1,832	0,5089	1832,2
	32	2,9		3,044	1,0783	3881,7
	40	3,7		4,756	1,6694	6009,8
	50	4,6		7,410	2,6148	9413,3
	63	5,8		11,862	4,1500	14940
	75	6,8		16,735	5,9218	21319
	90	8,2		24,187	8,5089	30632
	110	10		36,010	12,723	45804

PERMISSIBLE WORKING PRESSURE

Non potable water applications - heating systems or closed systems

TEMPERATURE (°C)	PERMISSIBLE WORKING PRESSURE (bar)		
	LIFETIME (years)	ROMAFASER PP-R 100 + FG SDR 7,4 S3.2	ROMAKLIMA PP-R 100 + FG SDR 11 S5.0
10	1	30,2	27,8
	5	28,2	26,2
	10	27,7	25,6
	25	26,9	24,7
	50	26,1	24,1
	100	25,2	23,5
20	1	28,6	23,8
	5	26,8	22,3
	10	26,1	21,7
	25	25,3	21
	50	24,5	20,4
	100	23,7	19,9
30	1	24,3	20,2
	5	22,8	18,9
	10	22,0	18,4
	25	21,3	17,8
	50	20,7	17,3
	100	20,0	16,8
40	1	20,5	17,1
	5	19,2	16
	10	18,7	15,6
	25	18,0	15
	50	17,5	14,6
	100	16,8	14,1
50	1	17,5	14,5
	5	16,2	13,5
	10	15,7	13,1
	25	15,2	12,6
	50	14,7	12,2
	100	14,1	11,9
60	1	14,7	12,2
	5	13,7	11,4
	10	13,2	11
	25	12,6	10,6
	50	12,1	10,3

CONTINUED >

CONTINUED >

TEMPERATURE (°C)	PERMISSIBLE WORKING PRESSURE (bar)		
	LIFETIME (years)	ROMAFASER PP-R 100 + FG SDR 7,4 S3.2	ROMAKLIMA PP-R 100 + FG SDR 11 S5.0
70	1	12,4	10,3
	5	11,4	9,6
	10	11,1	9,2
	25	9,6	8,0
	50	8,1	6,8
80	1	10,4	8,6
	5	9,2	7,7
	10	7,8	6,5
	1	6,2	5,2
95	5	8,7	7.2
	10	6,0	5.1
	50	5,1	4.4

Safety factor - 1,25.
The referenced service lifetime does not consider installation changes, such as: high concentration of disinfection agents, metallic materials out of specification, neither operating temperature and/or pressure malfunctions.
For sanitary water installations, working pressures should be reduced by 15%, for the same service lifetime. The maximum allowable temperature is 70ºC, which corresponds to thermal disinfection temperature and not to continuous operating temperature. Disinfection processes should be carried out according to mandatory regulations and under no circumstance a combination of different processes should be used.
In case of butt-welded pipes and/or fittings, allowable operating pressures should be reduced by 25%.

ROMAFASER ANTI-UV – PP-R 100 + FG SDR 7,4 ANTI-UV

ROMAFASER ANTI-UV PP-R 100 + FG pipe with a added outside layer that guarantees UV protection. Therefore, this pipe is the most recommended solution for applications where the installation will be exposed to UV radiation, for example, outdoor applications.

The UV protection layer is made of a specially stabilised PP-R 100 with a special additive that makes highly reliable and resistant to ageing and discolouration caused by UV radiation.

ROMAFASER ANTI-UV pipe can be welded directly, with no need to peel off the outside layer, pipe and fittings can be installed according the normal procedure, without additional steps.

All HELIROMA fittings have UV-stabilizer to resist to UV exposure during transport and installation. However, the fittings are not long-term resistant to UV light, therefore fittings must be protected.

The pipe is supplied in black colour.

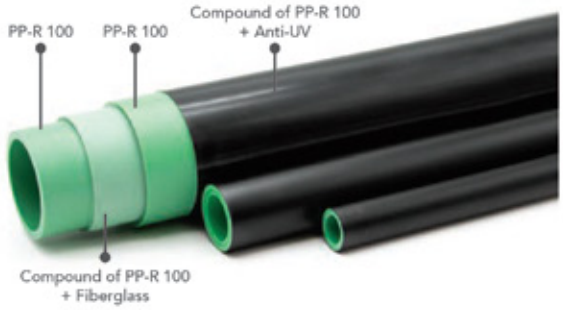

ADVANTAGES AND KEY FEATURES OF ROMAFASER ANTI-UV

UV PROTECTION

- EXCELLENT LONG-TERM PRESSURE RESISTANCE
- REDUCED THERMAL EXPANSION
- LONG SERVICE LIFE

PP-R SYSTEM

PP-RCT 125 + FG - ROMAFASER CT & ROMAKLIMA CT

PP-RCT 125 WITH FIBERGLASS

Polypropylene Random Copolymer - PP-R, is widely used for pipe application in many regions and countries, due to it's high temperature performance and the pipe-fitting reliable bond.

In line with the constant progress over the years and with the advance of technology, the evolution emerges from the PP-R 80 a monomodal PP-R, to the bi-modal PP-R based on improved polymerization technology PP-R 100, until today with a hexane modified PP-R made on the Spherizone technology PP-RCT 125.

The new PP-RCT 125 has outstanding performance allowing wall thickness reduction without compromising internal pressure resistance.

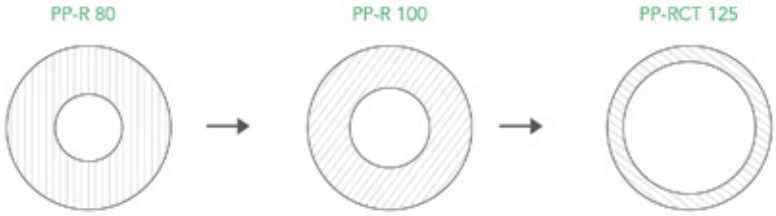

IMPROVEMENTS

- Higher resistance to pressure and stress;
- Increased MRS;
- Reduced wall thickness may be used, assuring same pressure resistance;
- Lower weight;
- Less material consumption;
- High hydraulic capacity;
- Improved high temperature performance;
- Long term performance.

Based on Polypropylene copolymer random with modified crystallinity–PP-RCT 125 production process resulting in products with outstanding properties such as: pressure resistance, high chemical resistance, creep and long-term performance.

PP-RCT 125

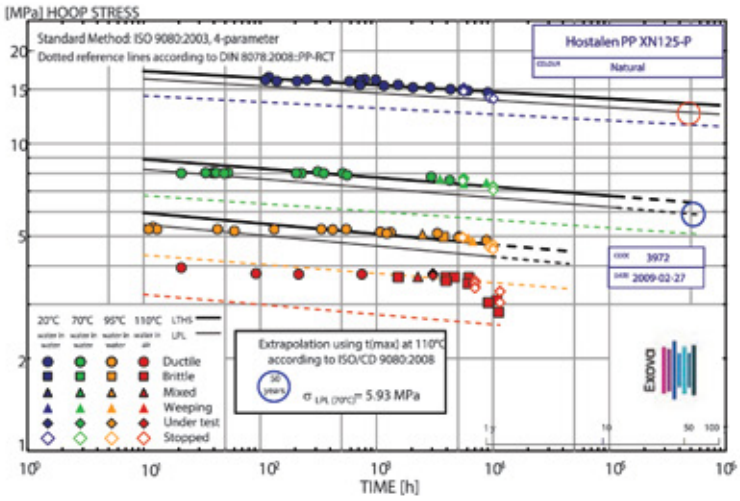

50 years
σ_{LPL} = 12.68 MPa
MRS = 12.5 MPa

In EN ISO 9080, the increase in CRS value (extrapolated to 50 years) at typical application temperature of 70°C can allow for a significant reduction of pipe wall thickness.

HELIROMA sets the innovation in the production of polymeric pipes, the current level of evolution is a Faser CT pipe made of polypropylene copolymer random with modified crystallinity–PP-RCT 125 with fiberglass.

A middle layer is a compound of fiberglass and PP-RCT 125, it is perfectly integrated in the pipe wall, the inner and outer layers remain unchanged, they are made of PP-RCT 125.

A piping system providing higher pressure resistance with thin wall, high chemical stability, highly resistant to corrosion, is lightweight and robust. The quality of Faser CT pipes combines a high quality raw material with engineering expertise.

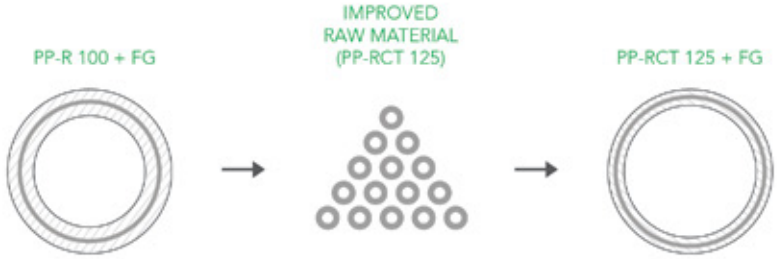

IMPROVEMENTS

An unique combination of raw materials and production process, resulting the latest generation of faser pipes.

- High performance;
- High flow rate;
- Reduced weight.

The ideal system for the most aggressive working conditions with high durability. The system includes different types of pipes, that are completed with more than 180 settings of fittings and connection elements as well as valves and ball valves:

ROMAFASER CT– **PP-RCT 125 + FG SDR 11**

ROMAKLIMA CT – **PP-RCT 125 + FG SDR 17**

ROMAFASER CT and ROMAKLIMA CT have many features, that makes them the best choice for different fields of piping applications.

These systems are compatible with all HELIROMA's PP-R systems.

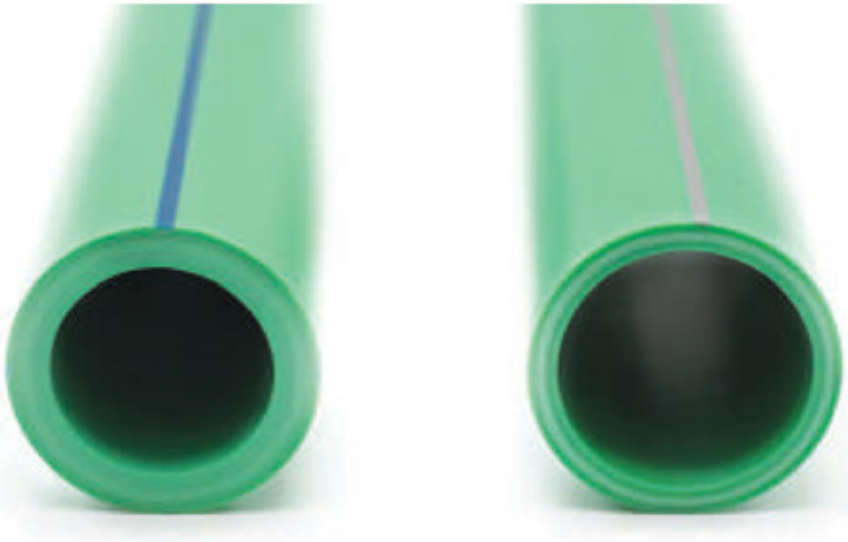

TECHNICAL PROPERTIES: PP-RCT 125 VS PP-R 100

PARAMETER	PP-RCT 125	PP-R 100	STANDARD
PHYSICAL			
MRS	12,5 MPa	10,0 MPa	ISO 9080
σ_{LPL} (20°C)	12,68 MPa	10,02 MPa	
σ_{LPL} (70°C)	5,93 MPa	3,63 MPa	
MFI 230°/2,16 kg	0,2 g/10min	0,3 g/10min	ISO 1133
MFI 230°/5,00 kg	1,0 g/10min	1,3 g/10min	ISO 1133
MFI 190°/5,00 kg	0,4 g/10min	0,5 g/10min	ISO 1133
Density	905 kg/m³	897 kg/m³	ISO 1133
MECHANICAL			
Tensile Modulus	850 MPa	850 MPa	ISO 527
Tensile Stress at Yield	26 MPa	24 MPa	ISO 527
Tensile Strain at Yield	12%	13%	ISO 527
Elongation at Yield	10%	12%	
THERMAL			
Cristalization Point Tc	101°C	97,5°C	
DSC Melting Point	136°C	139°C	DSC
OIT	40 min	40 min	ISO 11357
IMPACT			
IZOD Impact, Notched 0°C	13 KJ/m²	19 KJ/m²	ISO 179
Charpy Impact Strength Notched 23°C	60 KJ/m²	89 KJ/m²	ISO 179
Charpy Impact Strength Notched 0°C	8 KJ/m²	12 KJ/m²	ISO 179
Charpy Impact Strength Notched -20°C	2 KJ/ m²	2,7 KJ/m²	ISO 179

ROMAFASER CT - PP-RCT 125 + FG SDR 11

ROMAFASER CT a PP-RCT 125 with fiberglass on SDR 11 pipe, that allows increased temperature and working pressure, for higher stress applications. Best solution for hot and cold-water distribution, high and low temperature heating systems and industrial applications.

The pipe is supplied in green colour with 4 longitudinal grey lines.

ROMAKLIMA CT - PP-RCT 125 + FG SDR 17

ROMAKLIMA CT a PP-RCT 125 with fiberglass SDR 17 pipe, with a thin wall that will provides maximum flow rate while reducing material weight, cost and welding times. It can be used in applications such as high-pressure, high-temperature heating and industrial process systems.

The pipe is supplied in green colour with 4 longitudinal white lines.

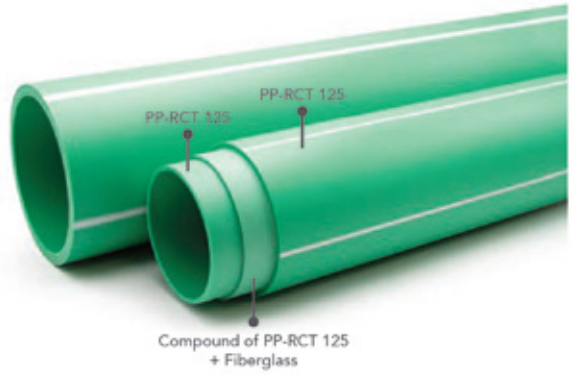

PP-RCT 125 + FG: PIPE PROPERTIES		
PARAMETER	VALUE	STANDARD
THERMAL		
Thermal Conductivity	0,135 W/mK	DIN EN ISO 8497
Thermal Expansion Coefficient	0,035 mm/m°C	VDE 0304
OIT	40 min	ISO 11357
Fire Classification	B2	DIN 4102
PHYSICAL		
Roughness	0,007 mm	ISO 5436
Pipe Constant	20	
Opacity	Yes	ISO 7686

ADVANTAGES AND KEY FEATURES OF ROMAFASER CT AND ROMAKLIMA CT

- HIGH CHEMICAL RESISTANCE
- INCREASED FLOW RATE DUE TO INCREASED INNER DIAMETER
- EXCELLENT LONG-TERM PRESSURE RESISTANCE
- REDUCED THERMAL EXPANSION
- FEWER SUPPORTS NEEDED
- LIGHTWEIGHT
- LONG LIFE EXPECTANCY
- CORROSION RESISTANT
- PREVENTS LIMESCALE
- MOLECULAR DOUBLE-BOND
- DRINKABLE WATER APPLICATIONS
- LOW THERMAL CONDUCTIVITY
- LOW ROUGHNESS
- LOW PRESSURE LOSS
- HIGH STABILITY
- ACOUSTIC INSULATION
- EASY AND FAST INSTALLATION
- SUPPLIED IN BARS
- ECO-FRIENDLY
- NATIONAL AND INTERNATIONAL CERTIFICATIONS

APPLICATIONS

The ROMAFASER CT SDR 11 and ROMAKLIMA CT SDR 17 have a wide range of applications, as well as working pressures and temperatures such as: new installations, repairs, renovations and prefabricate installations.

This system is suitable for applications including: drinking water installations, sanitary systems, hot and cold water distribution, heating and cooling systems, district heating, community systems, industrial applications. In specific applications, HELIROMA should be consulted.

ROMAFASER CT and ROMAKLIMA CT have a high success around the word, on installation on hotels, schools, offices and several industrial applications.

In the table below is shown the working pressure and temperature for ROMAFASER CT and ROMAKLIMA CT pipes, according specific rules and requirements.

APPLICATION CLASS		P_D (bar)	
		ROMAFASER CT & ROMAKLIMA CT	
		PP-RCT 125 + FG SDR 11 S5.0	PP-RCT 125 + FG SDR 17 S8.0
1	Hot water supply 60°C	6	4
2	Hot water supply 70°C	6	4
4	Underfloor heating and low temperature radiators	6	4
5	High-temperature radiators connection	4	-

On the following table are listed the admissible working pressure for their class of application, according EN ISO 15874.

APPLICATION CLASS		P_D (bar)					
		HELISYSTEM PP-R 100 SDR 6 S2.5	HELISYSTEM PP-R 100 SDR 7,4 S3.2	ROMAFASER PP-R 100 + FG SDR 7,4 S3.2	ROMAKLIMA PP-R 100 + FG SDR 11 S5.0	ROMAFASER CT PP-RCT 125 + FG SDR 11 S5.0	ROMAKLIMA CT PP-RCT 125 + FG SDR 17 S8.0
1	Hot water supply 60ºC	10	8	8	6	6	4
2	Hot water supply 70ºC	8	6	6	4	6	4
4	Underfloor heating and low temperature radiators	10	10	10	6	6	4
5	High-temperature radiators connection	6	6	6	-	4	-

PIPE MARKING

The following sequence must be printed once per meter in all pipes.

Example:

HR Heliroma ROMAFASER CT (PP-RCT/PP-RCT+FV/PP-RCT) Ø 40x3.7 mm SDR 11 SÉRIE 5 opaco AENOR CC 001/691 Classe 1-2-4/6 5/4 bar 50 years L DD/MM/YY HH:MM NºOP Made in Portugal

MARKED SYMBOL	DESCRIPTION
HR Heliroma	Manufacturer's name
ROMAFASER CT	Product trade mark
PP-RCT/PP-RCT+FV/PP-RCT	Material
d_e x e	Nominal outside diameter x nominal wall thickness
SDR 11	SDR of the pipe
SÉRIE 5	Pipe series S
Opaco	Opacity
AENOR	Certificates, approvals
1-2-4/6 5/4 bar 50 years	Application class combined with operating pressure
L	Machine number
DD/MM/YYYY HH:MM	Date of manufacture
N°OP	Production order number
Made in Portugal	Additional information

DIMENSIONS AND FLOW RATE

PIPE	DN	Wall Thickness (mm)	Speed (m/s)	Flow Capacity		
				m^3/h	L/s	L/h
ROMAFASER CT PP-RCT 125 + FG SDR 11 S5.0	20	2,8	2	1,1726	0,3257	1172,6
	25	3,5		1,8322	0,5089	1832,2
	32	2,9		3,8817	1,0783	3881,7
	40	3,7		6,0098	1,6694	6009,8
	50	4,6		9,4133	2,6148	9413,3
	63	5,8		14,940	4,1500	14940
	75	6,8		21,319	5,9218	21319
	90	8,2		30,632	8,5089	30632
	110	10		45,804	12,723	45804
	125	11,4		59,064	16,407	59064
	160	14,6		96,75	26,874	96747
	200	18,2		151,35	42,042	151352
	250	22,7		236,72	65,755	236719
ROMAKLIMA CT PP-RCT 125 + FG SDR 17 S8.0	125	7,4	2	68,673	19,076	68673
	160	9,5		112,42	31,229	112424
	200	11,9		175,56	48,768	175563
	250	14,8		274,69	76,303	274692
	315	18,7		435,77	121,048	435774
	355	21,1		553,29	153,693	553294
	400	23,7		703,05	195,292	703051

PERMISSIBLE WORKING PRESSURE

Non potable water applications - heating systems or closed systems

TEMPERATURE (°C)	PERMISSIBLE WORKING PRESSURE (bar)		
	LIFETIME (years)	ROMAFASER CT PP-RCT 125 + FG SDR 11 S5.0	ROMAKLIMA CT PP-RCT 125 + FG SDR 17 S8.0
10	1	28,8	14,4
	5	27,9	14,0
	10	27,5	13,8
	25	27,1	13,5
	50	26,7	13,4
	100	26,3	13,2
20	1	25,0	12,5
	5	24,2	12,1
	10	23,9	12,0
	25	23,5	11,7
	50	23,1	11,6
	100	22,8	11,4
30	1	21,7	10,8
	5	20,9	10,5
	10	20,6	10,3
	25	20,2	10,1
	50	19,9	10,0
	100	19,7	9,8
40	1	18,6	10,6
	5	18,0	10,5
	10	17,7	10,2
	25	17,3	10,2
	50	17,1	10,0
	100	16,8	10,0
50	1	15,9	9,4
	5	15,3	9,3
	10	15,1	9,3
	25	14,7	8,7
	50	14,5	8,6
	100	14,3	8,5
60	1	13,5	8,1
	5	13,0	7,9
	10	12,7	7,5
	25	12,4	7,4
	50	12,2	7,3

CONTINUED >

CONTINUED >

TEMPERATURE (°C)	PERMISSIBLE WORKING PRESSURE (bar)		
	LIFETIME (years)	ROMAFASER CT PP-RCT 125 + FG SDR 11 S5.0	ROMAKLIMA CT PP-RCT 125 + FG SDR 17 S8.0
70	1	11,3	7,3
	5	10,9	7,2
	10	10,7	7,2
	25	10,4	7,1
	50	10,2	7,0
80	1	9,5	6,6
	5	9,0	6,2
	10	8,9	6,2
	25	8,6	6,1
95	1	7,1	5,0
	5	6,7	5,1
	10	6,6	4,8

Safety factor - 1,25.
The referenced service lifetime does not consider installation changes, such as: high concentration of disinfection agents, metallic materials out of specification, neither operating temperature and/or pressure malfunctions.
For sanitary water installations, working pressures should be reduced by 15%, for the same service lifetime. The maximum allowable temperature is 70°C, which corresponds to thermal disinfection temperature and not to continuous operating temperature. Disinfection processes should be carried out according to mandatory regulations and under no circumstance a combination of different processes should be used.
In case of butt-welded pipes and/or fittings, allowable operating pressures should be reduced by 25%.

INSTALLATION GUIDELINES

GENERAL RECOMMENDATIONS

Before starting to work with HELIROMA's products it is very important to read the technical catalogue:

- HELIROMA's systems have to be assembled according to HELIROMA's instructions;
- For applications or conditions not mentioned, make sure to obtain HELIROMA's technical approval;
- All regulations and directives have to be fulfilled on designing and installation phases;
- Product warranty is valid only for HELIROMA's products.

DESIGNING GUIDELINES

Compliance with local regulations is mandatory and responsibility of the installer.

Pressure loss depends on the pipe length, pipe material, type and quantity of fittings, as well the flow rate, which is variable according the number and size of taps and fittings. Pressure Loss Tables, please refer to Annex C.

HELIROMA advises the maximum flow speed to be 2,0 m/s.

HELIROMA's pipe when has to pass through any wall of the building or any other type of construction element that could apply any harmful mechanical stress to it, it should do so inside a sleeve, also with a circular cross-section, of greater diameter and sufficiently resistant.

For vertical flow in exposed installations, the pipe passage way should do at least 3 cm on the side where occasional shocks could occur, in order to protect the pipe.

When the pipe network passes through a construction expansion joint of the building, either on the surface or in a recessed manner, an expansion element or device must be installed so that any structural movements do not apply mechanical stresses to it. The sum of the water hammer and hydrostatic pressure must not exceed the permissible operating overpressure.

FIXING TECHNIQUES

HELIROMA pipes must be installed in compliance with expansion forces:

- The fixing system must absorb the resulting forces;
- The fixing system should withstand water hammer effect, sagging any mechanical load;
- The pipes must be fixed on the required position.

Clamps and supports must be selected in accordance with the outside diameter of the pipe and must have rubber protection in order to prevent any possible damage from the direct contact of metal with plastic. Isophonic clamps are recommended. Alternatively protective tape can also be used to prevent direct contact of pipes with clamps. For more details about clamp types and dimensions, please see the image below and table on the next page.

"TRADITIONAL"
ISOPHONIC CLAMP

ARTICULATED
ISOPHONIC CLAMP

ISOPHONIC CLAMP
FOR PIPES WITH ISOLATION

SIZING TABLE CLAMPS			
DIAMETER OF PIPE	SIZE OF CLAMPS		ADMISSIBLE DIAMETER RANGE
(mm)	(mm)	(in)	(mm)
20	22	1/2"	20-25
25	28	3/4"	26-30
32	35	1"	32-36
40	40	1 1/4"	38-43
50	48	1 1/2"	47-51
63	60	2"	60-64
75	75	2 1/2"	75-80
90	90	3"	87-92
110	19	-	107-112
125	125	-	125-130
160	160	6"	159-166
200	200	-	200-212
225	224	-	223-228
250	250	-	249-254
315	315	-	314-319
400	400	-	399-404

Note: in insulated systems larger diameter clamps must be considered.

Along pipe assemblage, it is important to distinguish between **Fixed Point** and **Sliding Point**:

Fixed Point (FP) – Prevents the movement of the pipe, pipe expansion forces as well as additional loads are accommodated in this point, the fixed points segment the pipe on small sections, minimizing tensions. The connection between pipes and clamps is very strong, so the material in contact should be smooth to avoid possible damages on the pipe's surface.

Sliding Point (MP) – Is the point where the axial movement is allowed, without damaging the pipe. Point where the clamps are not tighten to the pipe. They should be placed on a vertical or horizontal directions and it is fundamental that movement is assured. Only the weight forces of the pipe system need to be considered on the sliding points design.

Note: in the directional rises only fixed points should be considered and these points must be placed immediately before and after the derivation points from the columns.

Where the direction of the flow changes, only fixed points should be used in order to avoid material fatigue.

THERMAL EXPANSION

Thermal expansion is defined by the expansion of the system as a consequence of a temperature variation.

In the case of pipes, in which one of the dimensions (length) is much bigger than the others, the significant expansion is the linear expansion.

The linear expansion of the pipe is calculated according to the following formula and can be taken from the table on Annex A.

THERMAL EXPANSION FORMULA

$\Delta L = L - L_0 = L_0 \times \alpha \times \Delta T$

ΔL	Linear expansion ($L-L_0$) (mm)
L	Final length of the pipe, at T temperature (m)
L_0	Initial length of the pipe, at T_0 temperature (m)
α	Linear expansion coefficient
ΔT	Variation of pipe temperature, in °C ($T-T_0$)

The linear expansion must be considered when the pipe is installed, regardless of the type of installation, being concealed, in ducts, not concealed / wall mounted.

For concealed installations, the resulting stress arising from thermal expansion are not critical as they are absorbed by the material itself, therefore do not require a specific fixing model.

In wall mounted installations, the linear expansion must be taken into account. Dimensional variations os the material have to be compensated, to prevent installation failure.

In situations in which thermal expansion is going to occur, it is necessary to calculate the variation of the length of the pipe sections, considering fixing points capable of "absorbing" these expansions.

Linear expansion due to temperature difference between operating temperature and installation temperature can be compensated by different installation techniques, or combination of techniques.

SUPPORT INTERVALS

Support intervals recommended according to temperature and outside pipe diameter on Annex B.

ABSORPTION ARM

In most cases, direction changes can be used to compensate linear expansion in pipes. The length of the arm (LS) is calculated according to length (L) and pipe dimension, through the following formula:

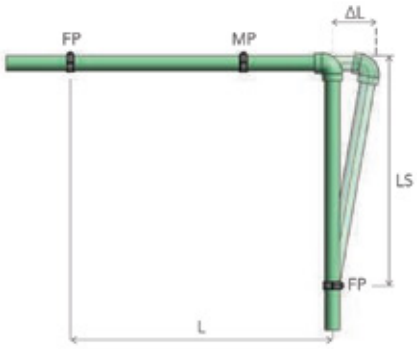

ARM LENGTH FORMULA

$LS = C \times \sqrt{(d_e \times \Delta L)}$

LS	Length of absorption arm (mm)
C	Pipe specific constant
d_e	Outside diameter of the pipe
ΔL	Linear expansion coefficient

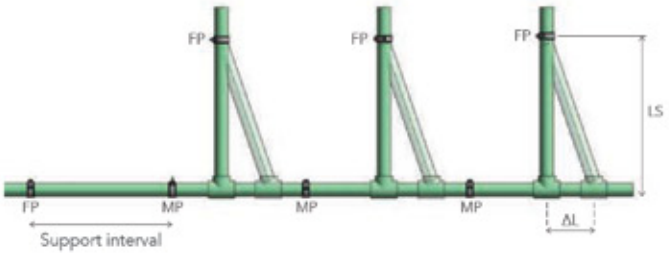

EXPANSION LOOP

The expansion loop is equivalent to two absorption arms, and are used if the linear expansion is not compensated on absorption arm. For distances over 12 linear meters the use of absorption arms expansion loops are essential in order to avoid stress concentrate.

ABSORPTION BEND FORMULA

$LC = 2 \times \Delta L + ms$

LC	Minimum width of the bend (mm)
ΔC	Lineral expansion (mm)
ms	Minimum safety = 150mm

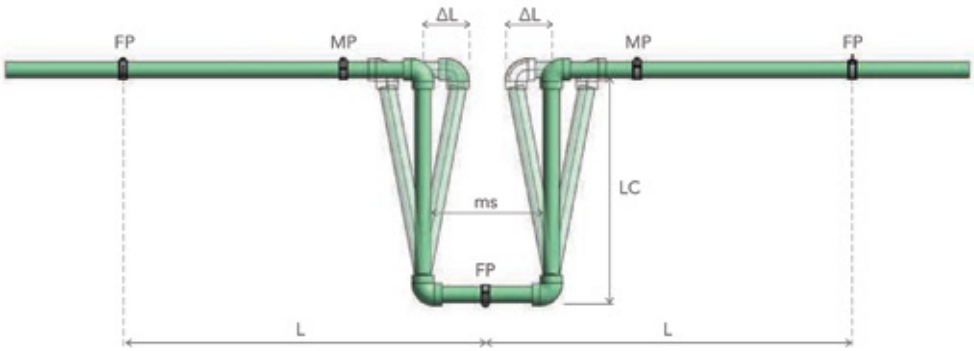

Example:

Dimension of the rod = 4 meters
Diameter of the pipe = 25 mm
ΔT = 40°C

Calculation of the thermal expansion
$\Delta L = 4 \times 0{,}15 \times 40$
= 24 mm

Calculation of the length of the absorption arm for the previous example
$Ls = 20 \times \sqrt{25} \times 24$
$= 20 \times 24{,}5$
= 490 mm

Calculation of the absorption bend
$Lc = 2 \times 24 + 150$
= 198 mm

EXPANSION LOOP - PRE-TENSIONING

If on the installation, the space is limited, it's possible to reduce the LC, as well as the LS by pre-stressing.

Pre-stress installation, when planned and carried out carefully, the linear expansion is hardly visible.

LENGTH OF PRE-STRESS FORMULA

$LSP = C \times \sqrt{d_e} \times \frac{\Delta L}{2}$

LSP	Length of pre-stress
C	Material specific constant (PP-R: C=20)
d_e	Outside diameter of the pipe
ΔL	Linear expansion coefficient: α = 0,15mm/m°C

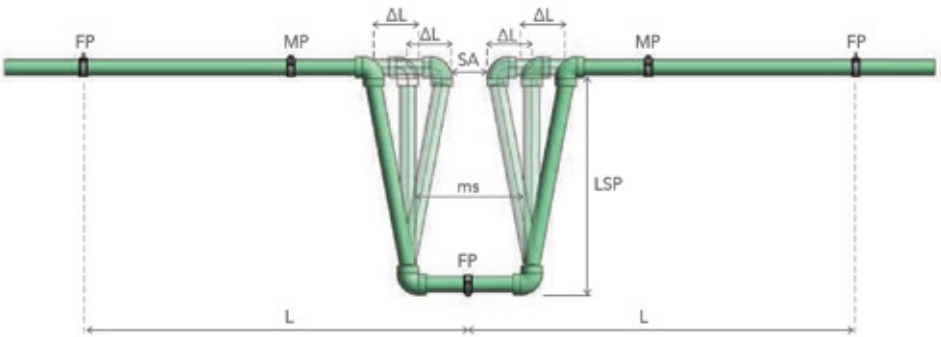

INSULATION

The thermal insulation of pipelines and fittings would be taken into consideration to: protect pipes against condensation, protect the cold-water pipes against exposure to heat, minimize heat losses, reduce the transfer of heat to the stutters around, reduce the sound transmission, protect against external corrosion and protect against mechanical stress.

Due to the good insulation characteristics of PP-R, insulation thickness can be less than the one used with metallic piping systems. The thermal conductivity coefficient of PP-R is 0,135 W/mK, copper pipe is 401 W/mK and iron pipe is 80,2 W/mK.

Cooling pipes must be provided with suitable insulation to prevent condensation. Condensation occurs when the temperature of a surface falls below the saturation temperature of the surrounding air. The saturation temperature of the air is determined from the current temperature and the relative humidity.

The temperature of the surface is determined by the heat transfer from the pipe surface, from the air to the pipe surface, and the heat transfer through the pipe's wall.

The insulation thickness depends on the required working conditions and specific national requirements and guidelines.

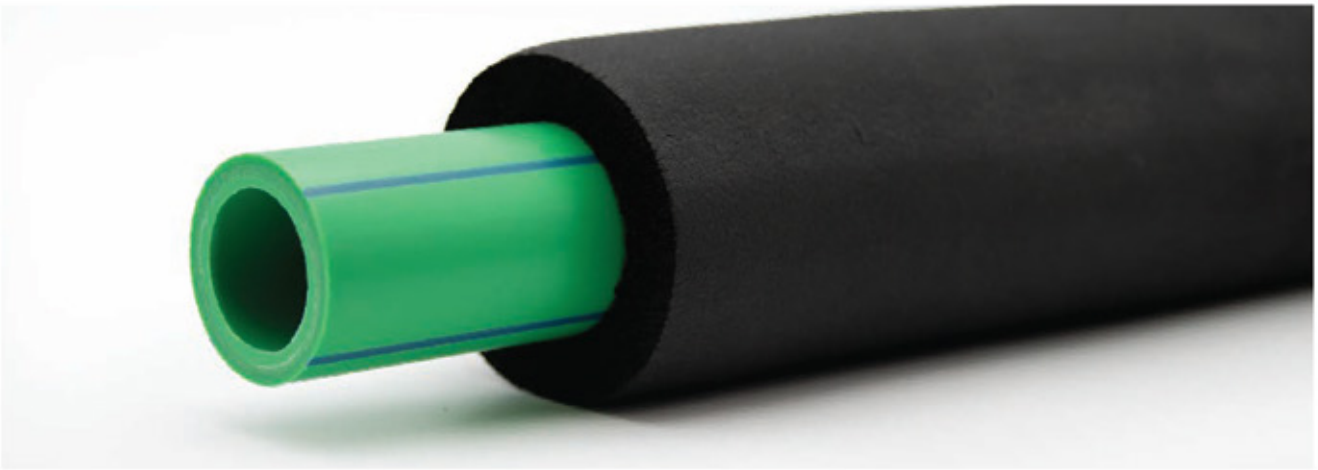

LEAKAGE TEST

All HELIROMA products must be submitted to a leakage test. The product warranty is only valid if the leakage test has been performed, on the date the system has been installed.

The test must be carried out using water. To use a different fluid, please contact HELIROMA technical department. The system should be purged before the test has been performed.

During the leakage test the temperature must be constant, the variations on temperature has impact on the pressure test result. Due to the properties of the materials used, plastic pipes expand for a limited period of time when they are subjected to pressure. This has an impact on the test result.

The test procedure has three phases, preliminary, principal and final phase, the pressure in each phase depends on the pipe. Please refer to the protocol recommended on Annex D.

The sealing of the system must be evident, and after that must be confirmed with a written record, that has to be signed by the installer, stating place and date and sent to HELIROMA technical department.

CHEMICAL RESISTANCE

Polypropylene is characterized by it's high resistance to a different range of chemical substances which might be in a gaseous or liquid form at different temperatures and pressures. Thanks to the special properties of its raw material, HELIROMA systems features excellent chemical resistance. Fittings with brass inserts have different chemical resistance due the PP-R components.

In the table below, there is a list that establishes a provisional classification of chemical resistance of PP-R with respect to about 180 fluids. It's intended to provide general guidelines on the possible utilization of polypropylene pipes.

For specific application where chemical substances should flow on our pipes, please contact HELIROMA technical department to work out suitable solutions with you.

CHEMICAL	CONCENTRATION	20°C	60°C
Acetic acid	> 40%	✓	✓
Acetic acid	50%	✓	✓
Acetic acid, glacial	>96%	✓	□
Acetic anhydride	100%	✓	-
Acetone	100%	✓	✓
Aceptophenone	100%	✓	□
Acrylonitrile	100%	✓	-
Air		✓	✓
Almond oil		✓	-
Alum	Sol	✓	-
Ammonia, aqueous	>30%	✓	-
Ammonia, dry gas	100%	✓	-
Ammonia, liquid	100%	✓	-
Ammonium acetate	100%	✓	✓
Ammonium chloride	Sat. sol	✓	-
Ammonium fluoride	Sol	✓	✓
Ammonium hydrogen carbon	Sat.sol	✓	✓
Ammonium hydroxide	Sat.sol	✓	-
Ammonium metaphosphere	Sat.sol	✓	✓
Ammonium nitrate	Sat.sol	✓	✓
Ammonium phosphate	Sat.sol	✓	-
Ammonium sulphate	Sat.sol	✓	✓
Amyl acetate	100%	□	-
Amyl alcohol	100%	✓	✓
Aniline	100%	✓	✓
Apple juice	100%	✓	-
Aqua regia	HCl/HNO3=3/1	×	×
Barium carbonate	Sat.sol	✓	✓
Barium chloride	Sat.sol	✓	✓
Barium hydroxide	Sat.sol	✓	✓
Barium sulphate	Sat.sol	✓	✓
Benzene	100%	✓	×
Benzoic acid	Sat.sol	□	-
Benzyl alcohol	100%	✓	□
Borax	sol	✓	✓
Boric acid	Sat.sol	✓	-
Bromine, gas		□	×
Bromine, liquid	100%	×	×

CHEMICAL	CONCENTRATION	20°C	60°C
Butane	100%	✓	-
Butanol	100%	✓	□
Butyl acetate	100%	✓	□
Butyl glycol	100%	✓	-
Butyl phenol	Col.sat.sol	✓	-
Butyl phthalate	100%	✓	□
Calcium carbonate	Sat.sol	✓	✓
Calcium chloride	Sat.sol	✓	✓
Calcium hydroxide	Sat.sol	✓	✓
Calcium hypochlorite	Sol	✓	-
Calcium nitrate	Sat.sol	✓	✓
Camphor oil		×	×
Carbon dioxide, dry gas	100%	✓	✓
Carbon dioxide, wet		✓	✓
Carbon disulphide	100%	✓	×
Carbon tetrachloride	100%	×	×
Castor oil	100%	✓	✓
Caustic soda	>50%	✓	□
Chorine, aqueous	Sat.sol	✓	□
Chlorine, dry gas	100%	×	×
Chlorine, liquid	100%	×	×
Cloroacetic acid	Sol	✓	-
Chloroethanol	100%	✓	-
Chloroform	100%	□	×
Chlorosulphonic acid	100%	×	×
Chome alum	Sol	✓	✓
Chromic acid	>40%	✓	□
Citric acid	10%	✓	✓
Coconut oil		✓	-
Corn oil		✓	□

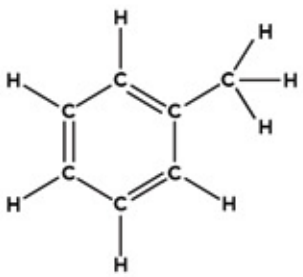

CHEMICAL	CONCENTRATION	20°C	60°C
Cottonseed oil		✓	-
Cresol	>90%	✓	-
Copper III Chloride	Sat.sol	✓	-
Copper III nitrate	30%	✓	✓
Copper III sulphate	Sat.sol	✓	-
Cyclohexane	100%	✓	-
Cyclohexanol	100%	✓	-
Cyclohexanone	100%	□	×
Dextrose	Sol	✓	✓
Dibutyl phthalate	100%	✓	□
Dichloroacetic acid	100%	□	-
Dicloroethylene (A-B)	100%	□	-
Diethanolamina	100%	✓	-
Diethyl ether	100%	✓	□
Diethyleno glycol	100%	✓	✓
Diglycolic acid	Sat.sol	✓	-
Disooctyll phthalate	100%	✓	□
Dimethyl amine	100%	✓	-
Dimethyl formalde	100%	✓	✓
Dyetyl phthalate	100%	□	□
Dioxane	100%	□	□
Distilled water	100%	✓	✓
Ethanolamine	100%	✓	-
Ethyl acetate	100%	□	×
Ethyl alcohol	>95%	✓	✓
Ethyl chloride	100%	×	×
Ethylene chloride	100%	□	□
Ethylene glycol	100%	✓	✓
Formaldehyde	40%	✓	-
Formic acid	10%	✓	✓
Formic acid	100%	✓	×
Formic acid anhydrous	Sol	✓	□
Fructose		✓	✓
Fruit juice		✓	✓
Gasoline, petrol		×	×
Gelatine		✓	✓
Glucose	20%	✓	✓
Glycerine	100%	✓	✓
Glycolic acid	30%	✓	-
Heptane	100%	□	×
Hexano	100%	✓	□
Hydrobromic acid	>48%	✓	-
Hydrochloric acid	2-7%	✓	✓
Hydrochloric acid	10-20%	✓	✓
Hydrochloric acid	30%	✓	□
Hydrochloric acid	35-36%	✓	-
Hydrofluoric acid	Dil.sol	✓	-

CHEMICAL	CONCENTRATION	20°C	60°C
Hydrofluoric acid	40%	✓	-
Hydrogen	100%	✓	-
Hydrogen chloride, dry gas	100%	✓	✓
Hydrogen peroxide	>10%	✓	-
Hydrogen peroxide	>30%	✓	□
Hydrogenic sulphide, dry gas	100%	✓	✓
Iodune in alcohol		✓	-
Isopropyl alcohol	100%	✓	✓
Isopropyl ether	100%	✓	-
Isoctane	100%	□	×
Lactic acid	>90%	✓	✓
Lanoline		✓	□
Linseed oil		✓	✓
Magnesium carbone	Sat.sol	✓	✓
Magnesiou chloride	Sat.sol	✓	✓
Magnesium sulphate	Sat.sol	✓	✓
Malic acid	Sol	✓	✓
Mercury III chloride	Sat.sol	✓	✓
Mercury III cyanide	Sat.sol	✓	✓
Mercury II nitrate	Sol	✓	✓
Mercury	100%	✓	✓
Methyl acetate	100%	✓	✓
Methyl alcohol	5%	✓	□
Methyl amine	>32%	✓	-
Methyl bromide	100%	×	×
Methyl ether ketone	100%	✓	×
Methylene chloride	100%	□	×
Milk	100%	✓	✓
Monochloroacetic acid	>85%	✓	✓
Naphtha		✓	×
Nickel chloride	Sat.sol	✓	✓
Nickel nitrate	Sat.sol	✓	✓
Nickel sulphate	Sat.sol	✓	✓
Nitric acid	10%	✓	×
Nitric acid	30%	✓	-
Nitric acid	40-50%	□	×
Nitric acid (w/ nitrogen dioxide)		×	×
Nitrobenzene	100%	✓	□
Oleis acid	100%	✓	□
Oleum sulphuric acid w/60% SO3)		×	×
Olive oil			✓
Oxalic acid	Sat.sol	✓	□
Oxygen	100%	✓	-
Paraffin oil		✓	□
Peanut oil		✓	✓
Papperming oil		✓	-
Perchloric acid	2N	✓	-

CHEMICAL	CONCENTRATION	20°C	60°C
Petroleum ether		□	□
Phenol	5%	✓	✓
Phenol	90%	✓	-
Phosphoric acid	25%	✓	✓
Phosphoric acid	25-85%	✓	✓
Phosphoric oxychlorido	100%	□	-
Piric Acid	Sat.sol	✓	-
Potassium bicarbonate	Sat.sol	✓	✓
Potassium borate	Sat.sol	✓	✓
Potassium bromate	>10%	✓	✓
Potassium bromide	Sat.sol	✓	✓
Potassium carbonate	Sat.sol	✓	-
Potassium chlorate	Sat.sol	✓	✓
Potassium chloride	Sat.sol	✓	-
Potassium chromate	Sat.sol	✓	✓
Potassium syanlde	Sol	✓	-
Potassium fluoride	Sat.sol	✓	✓
Potassium hydroxide	>50%	✓	✓
Potassium iodide	Sat.sol	✓	-
Potassium nitrate	Sat.sol	✓	✓
Potassium perchlorate	10%	✓	✓
Potassium permanganate	2N	✓	-
Potassium persulphate	Sat.sol	✓	-
Potassium sulphate	Sat.sol	✓	-
Propane	100%	✓	-
Proporic acid	>50%	✓	-
Pyridine	100%	□	-
Sea water			✓
Silicone oil			✓
Silver nitrate	Sat.sol	✓	✓
Sodium acetate	Sat.sol	✓	✓
Sodium benzoate	35%	✓	-
Sodium carbonate	>50%	✓	✓
Sodium chlorate	Sat.sol	✓	-
Sodium chloride	Sat.sol	✓	✓
Sodium chlorite	2%	✓	□
Sodium chlorite	20%	✓	□
Sodium dichromate	Sat.sol	✓	✓
Sodium hydrogen carbonate	Sat.sol	✓	✓
Sodium hydrogem sulphate	Sat.sol	✓	✓
Sodium hydrogem sulphite	Sol	✓	-
Sodium hydroxide	1%	✓	✓
Sodium hydroxide	10-60%	✓	✓
Sodium hypoclorite	5%	✓	-
Sodium hypoclorite	10%	✓	-
Sodium hypoclorite	20%	✓	-
Sodium metaphosphate	Sol	✓	-

CHEMICAL	CONCENTRATION	20°C	60°C
Sodium nitrate	Sat.sol	✓	✓
Sodium perborate	Sat.sol	✓	-
Sodium phosphate (neutral)	Sat.sol	✓	✓
Sodium silicate	Sol	✓	✓
Sodium sulphate	Sat.sol	✓	✓
Sodium sulphide	Sat.sol	✓	-
Sodium sulphite	40%	✓	✓
Sodium thiosulphate	Sat.sol	✓	-
Soybean oil		✓	□
Stannous chloride (IV)	Sat.sol	✓	✓
Stannous chloride (II)	Sat.sol	✓	✓
Succinic acid	Sat.sol	✓	✓
Sulphur acid	>10%	✓	✓
Sulphur dioxide, dry or wet	100%	✓	✓
Sulphur acid	10-30%	✓	✓
Sulphuric acid	50%	✓	□
Sulphuric acid	96%	✓	□
Sulphuric acid	98%	□	×
Sulphurous acid	Sol.	✓	-
Tartaric acid	10%	✓	✓
Tetrahydroluran	100%	□	×
Tetralin	100%	×	×
Thiophene	100%	✓	□
Toluene	100%	□	×
Trichloroacetic acid	>50%	✓	✓
Trichloroethylene	100%	×	×
Triethanolamine	sol	✓	-
Turpertine		×	×
Urea	Sat.sol	✓	-
Vinegar		✓	✓
Water brackish, mineral, potable		✓	✓
Whiskey		✓	-
Wines		✓	-
Xylene	100%	×	×
Yeast	Sol	✓	✓
Zinc chloride	Sat.sol	✓	✓
Zinc sulphate	Sat.sol	✓	✓

ABBREVIATIONS

Sat.sol	Satured aqueous solution, prepared at 20°C
Sol	Aqueous solution at concentratiom higher than 10%, but not satured
Dil.sol	Dilute aqueous solution at concentration equal to or lower than 10%
✓	Satisfatory
□	Limited
×	Not satisfatory

DISINFECTION

Disinfection is a process very important in the supply of safe water. The destruction of pathogenic microorganisms is necessary and commonly involves the use of reactive chemical agents such as chlorine. Before start the disinfection process it is fundamental analysis all equipments and materials installed on circuit, to assure their capability to the conditions to apply.

CHEMICAL DISINFECTION – DRINKING WATER

Chemical disinfection of drinking water includes a chlorine-based treatment and is intended to maintain a residual chlorine concentration in the water to provide protection from post-treatment contamination and during storage.

In case of continuous disinfection using chlorine, it can be used with a content of free chlorine of up to 0,3 mg/L (value in accordance with 2001 drinking water ordinance). The installation temperature should not exceed 70°C to avoid system early oxydation. Residual disinfection in not necessary where there is no evidence of water contamination, unless specific requirements to provide that.

Chlorine dioxide is absolutely not recommended.

Recommendation of the World Health Organization – guidelines for Drinking-water quality (4th Edition) advises that for effective disinfection, there should be residual concentration of free chlorine of ≥0,5 mg/L after at least 30 minutes contact time at pH<8,0. A chlorine residual should be maintained through the distribution system. At the point of delivery, the minimum residual concentration of free chlorine should be 0,2 mg/L.

CHEMICAL DISINFECTION - SYSTEM

The disinfection of a system is a discontinuous measure, unlike the disinfection of drinking water. This procedure comprising a drinking water system from the area of contamination to the tapping point of the consumer. Generally, a disinfection must be applied for a short period of time, only in case of an identified contamination.

In case of discontinuous disinfection, it can be done twice a year with a content of free chlorine of 50 mg/L for no more than 12 hours. Alternatively, it can be used 150 mg/L of hydrogen peroxide H_2O_2 for 24 hours.

During the disinfection process the maximum temperature is 30°C.

Chlorinated water based chemical disinfection has a direct influence on the lifetime of a products, pipes and fittings.

Chlorine dioxide is absolutely not recommended.

After disinfection, the system should be thoroughly flushed with fresh water until the free residual chlorine is at the level present in the potable water supplied.

THERMAL DISINFECTION - SYSTEM

Thermal disinfection of a system should be done according to DVGW W551 to the prevention of legionella bacteria. The procedure advises that the water temperature should be set to 70°C for at least 3 minutes at all points of a drinking water system. The maximum admissible temperature and pressure on the installation must be confirmed.

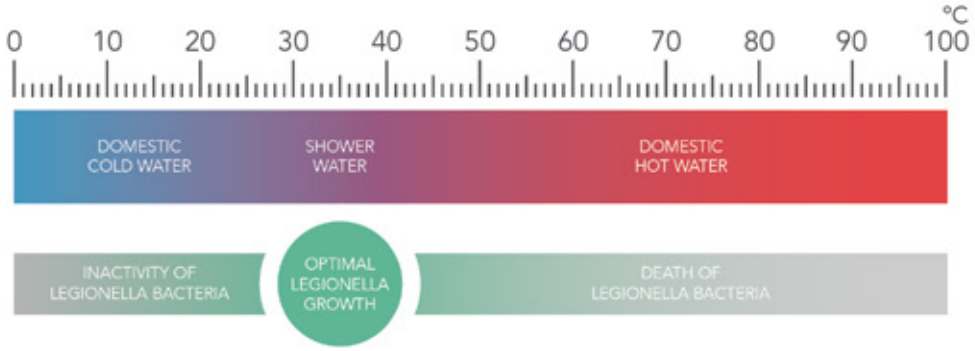

IMPORTANT NOTES

- **Chemical and thermal disinfection cannot be combined.**

- Carrying out shock disinfection at high temperatures, pressures or chemical concentrations, is not allowed, as premature material damage and failure can occur.

- Chlorine dioxide is nowadays the most used disinfectant in some countries. This is explained by the fact that chlorine dioxide is easier to add, cheaper to produce than chlorine, but it is more oxidant. However, it does not provide a residual effect, as chlorine does. The main concerns with chlorine dioxide are with the residual concentrations of chlorine dioxide and the by-products chlorite and chlorate.

The use of chlorine dioxide requires close monitoring. Materials in the drinking water systems are very affected due to the high oxidation potential of a chlorine dioxide.

Along with sealing materials, piping components are damaged too, regardless of whether they are made of plastic or metal. According to the above explanations, chlorine dioxide should not be used in systems as a disinfecting agent.

INTEGRATION OF OTHER SYSTEMS WITH HELIROMA PP-R SYSTEM

The integration between HELIROMA piping system and other compounds not made of PP-R, for example valves, pumps, other piping, strainers, must be considered to ensure that the operating parameters won't damage the HELIROMA piping.

Be aware that HELIOMA pipe systems may not be compatible with other materials on the installation.

HELIROMA pipes and fittings do not require treatment to protect them from corrosion. However, metals in the system may be prone to corrosion.

For example, in the case of the combination of copper and PP-R pipes, the erosion/corrosion of copper pipes and fittings in series with the polymer pipe and fittings results in the presence of copper ions is the system.

These ions are aggressive and at high temperature will promote the oxidation of PP-R. The result is a rapid consumption of stabilizer additives as it attempts to combat the copper-induced reactions. When it is totally consumed the PP-R is left vulnerable to attack.

This reveals as a reduction in OIT and a shorter PP-R lifetime. Further stress accelerates crack formation that propagates under applied thermal and mechanical stress leading to failure.

TRANSPORT AND STORAGE

HELIROMA pipes can be stored indoor or outdoor, preferentially in a covered area, protected from direct sunlight and low temperatures. Pipes and fittings must not be exposed to direct UV-radiation, for long periods. This radiation has effects on the durability of all polymer plastics. Do not store permanently outdoor.

At low temperature, pipes and fittings should be handled carefully, it is possible to damage pipes with strong impacts.

Despite the high quality and resistance of all HELIROMA products, they should be handled with caution. Do not drop pipes when unloading and protect them form falling objects, or equipments. The process of loading, transport and subsequent unloading should be carried out making sure that pipes and fittings do not suffer any damage.

The support of pipes during storage and transportation is fundamental. Therefore, certify that it has a solid base to assure that the pipes are always supported.

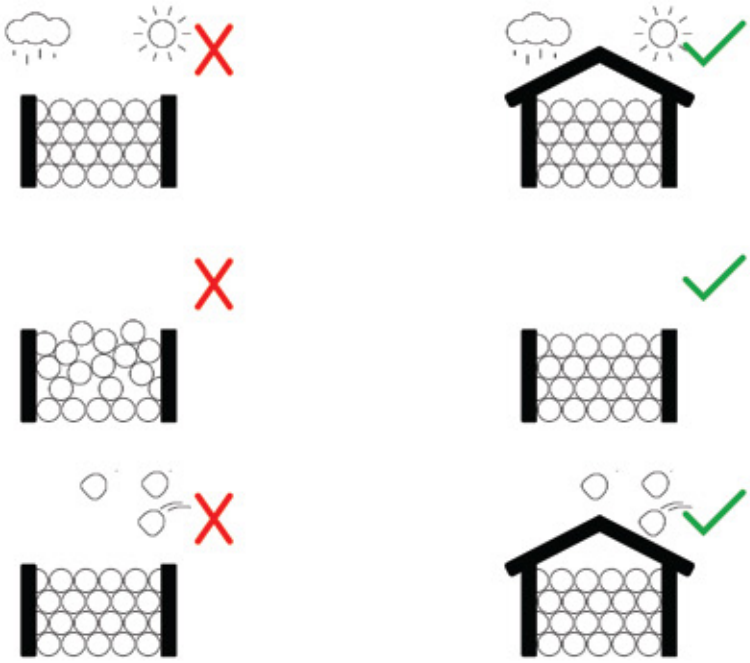

WELDING TECHNOLOGY

In order to obtain good installation results of HELISYSTEM, ROMAFASER and ROMAKLIMA systems, the following recommendations are considered important by HELIROMA and should be taken into consideration, as well as the welding technique and linear expansion.

RECOMMENDATIONS FOR THE APPROPRIATE USE OF THE SYSTEM

RESISTANCE TO UV RAYS
PP-R, such as all thermoplastics, should not be directly exposed to sunlight.

RESISTANCE TO LOW TEMPERATURES
Resistance to low temperature: at low temperatures - close to 0ºC, the system becomes less resistant.
Avoid impacts, especially on the ends of the pipes. The use of pipes with incisions or scratches caused by handling is inadvisable.

PIPE CURVATURE
Do not use flames to make curves or deviations, as this can affect the molecular structure of the polypropylene.

SEALING OF METALLIC CONNECTIONS
Use Teflon tape or liquid to avoid leaks. Do not use fittings with ungraded or conical bolts, and tighten without excessive force.

CUT
In order to obtain a cut free from shavings and perpendicular to the pipe's axis, use appropriate cutting equipment.
To avoid the appearance of micro-cracks, cut 2 cm at the end of the pipe, before welding.

CHECKING
For the correct handling, before the start of thermofusion, all devices and tolls must be checked.

WEATHER CONDITIONS
Welding area must be protected against weather conditions, for example: rain, wind and temperature changes.

COOLING DOWN CONTROL
During the welding process, cooling down by draft should be avoided.

CLEANING
Welding areas and tools must be clean and free of greases for a perfect welding process.

SOCKET WELDING WITH AN HAND-HELD WELDING MACHINE

SCAN TO SEE
INSTRUCTION VIDEO

1) Pipes and fittings are joined by termofusion at 260°C, with appropriate welding equipment provided by HELIROMA. Connect to power (220V) and wait until the green control light switches off. From that moment on you can start working.

2) Simultaneously, warm up the entire depth of the pipe and the end of the fitting with the polywelder, applying slight pressure. Once the heating period has finished, join the pieces without interruptions.

3) During a short period of time - 3s, you may readjust the welded parts (do not rotate over 30°).
A few minutes later, the fusion will reach its maximum strength.

SOCKET WELDING WITH AN HAND-HELD WELDING MACHINE - TIMES

NOMINAL DIAMETER	WELDING DEPTH	HEATING TIME	HANDLING TIME	COOLING TIME
(mm)		(s)		(min)
20	14,5	5	4	2
25	16	7	4	2
32	18	8	6	4
40	20,5	12	6	4
50	23,5	18	6	4
63	27,5	24	8	6
75	31	30	8	8
90	35,5	40	8	8
110	41,5	50	10	8
125	40	70	12	10

Note: heating time starts when the pipe and fitting are correctly positioned over the welding bushes.

SOCKET WELDING WITH A STATIONARY WELDING MACHINE

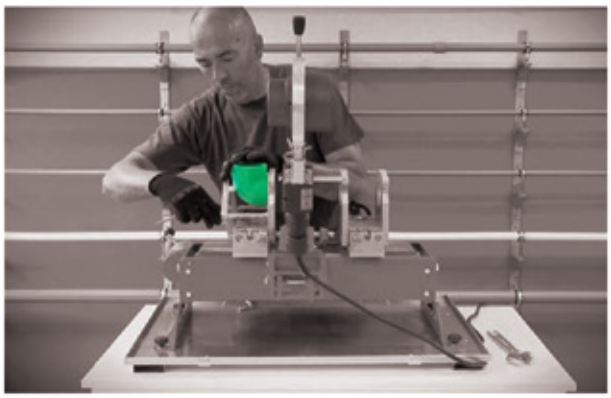

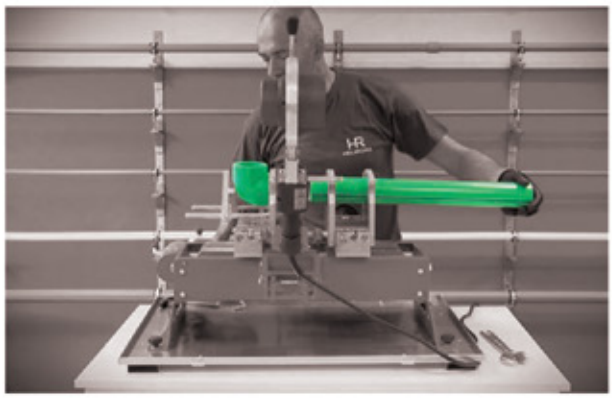

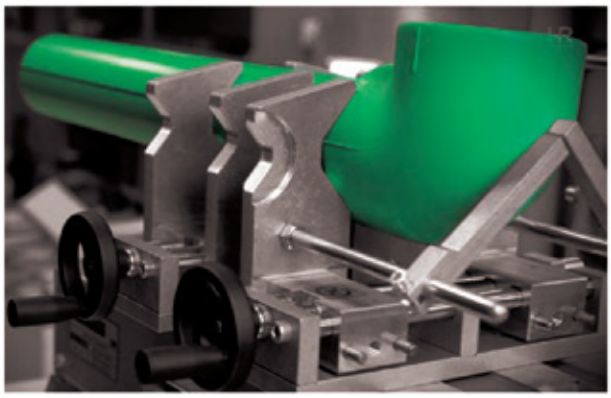

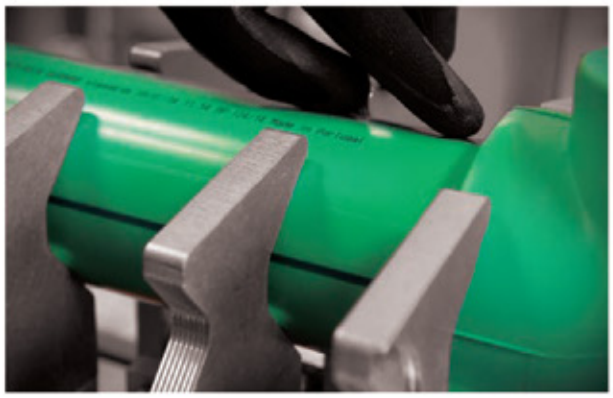

SCAN TO SEE
INSTRUCTION VIDEO

1) Check the machine procedure: temperature check - 260°C, adjust clamping jaws according to the size needed and adjust machine size selector according to the size to be welded.

2) Fix the fitting properly against the clamping jaws as well as the pipe (specific jaw for each pipe and fitting). Note: when pipe and fittings are pressed by the jaws it should not create ovality either on the pipe or fitting.

3) Position the welding device centrally to the pipe-fitting axis and remove it.

4) In this position, push the pipe against the fitting and fix it with the clamping jaws.

5) Adjust the welding time according to the recommendations on Table (Socket Welding with a Hand-Held Welding), place the welding device and push the fitting and pipe slowly as far as they will go up to the marking.

6) The heating time starts when the pipe and fitting are completely pushed on the tool. When heating time is complete, remove the heating device quickly and join the pipe and fitting.

7) Consider cooling times.

BUTT WELDING PROCESS

SCAN TO SEE
INSTRUCTION VIDEO

PIPE DIMENSION ≥160 mm

1) Make sure the machine and all its components are working properly;

2) Place the machine in position on a flat surface to ensure its stability;

3) Place the fixed part on the first pipe (1st and 2nd jaws) or fitting (1st jaw) and secure it with the jaw/s;

4) Move the entire set forward, ensuring that there is enough space to place the rectifier between the two ends of the pipe, or pipe and fittings;

5) Insert the second pipe and tighten the jaws (3rd and 4th jaws, or 2nd, 3rd and 4th jaws, if there is a fitting in the 1st jaw), until a perfect confrontation and alignment of the ends is achieved;

6) Join the ends of the pipe/pipe or pipe/fitting at the limit of the rectifier, using the bench handle;

7) Rectify the pipe perimeter until a continuous tape is obtained on both sides. In this way, any defects are eliminated and a surface free of oxidised waste material is achieved, ensuring that both ends are perfectly parallel;

8) Remove the rectifier and tape, avoiding any contact with the rectified area. Ensure parallelism and alignment (maximum tolerance is 10% of the pipe's thickness);

9) Clean the surface of the heating plate with a cloth soaked in a degreasing solution;

10) Check the polywelder temperature on the display (210°C ± 10°C);

11) Set the correct temperature for the polywelder, on the bench structure;

12) Bring the ends of the pipe/pipe or pipe/fitting close to the heating plate;

13) Put the group under pressure until reaching pressure X1 and ensuring that the ends of the pipe form a uniform joint with the Y height around the entire perimeter. After reaching the intended height, maintain the polywelder at pressure X2, during Z1 seconds. (see values on table 16 or 17);

14) Reduce the pressure and separate the ends from the polywelder;

15) Remove the polywelder and quickly join the parts (see maximum manipulation time – Z2). Place group at pressure X3 during time period Z3. The system should not be submitted to any mechanical stress during time period Z4. (see values on table 16 or 17);

16) After the cooling time, reduce muzzle pressure and proceed with the next welding.

Welding temperature: 210°C ± 10°C

PP-R 100 WITH FIBERGLASS SDR 7,4 | S 3.2 (MACHINE: OMISA SP 250 EVO - SP 315 EVO)

NOMINAL DIAMETER	ADJUSTMENT		HEAT			WELDING		COOLING	
	PRESSURE P_1*	BURR HEIGHT Y	PRESSURE P_2	TIME T_2		MAXIMUM MANIPULATION TIME T_3	CONTACT TIME T_4	PRESSURE P_5*	TIME T_5
(mm)	(bar)	(mm)	(bar)	(s)	(min : s)	(s)	(s)	(bar)	(min)
160	19	1,5	1,5	360	06:00	10	19	22	34
200	29	2	2,9	410	06:50	11	23	27	42
250	45	2	4,5	460	07:40	13	29	34	51

PP-R 100 WITH FIBERGLASS SDR 11 | S 5.0 (MACHINE: OMISA SP 250 EVO - SP 315 EVO)

NOMINAL DIAMETER	ADJUSTMENT		HEAT			WELDING		COOLING	
	PRESSURE P_1*	BURR HEIGHT Y	PRESSURE P_2	TIME T_2		MAXIMUM MANIPULATION TIME T_3	CONTACT TIME T_4	PRESSURE P_5*	TIME T_5
(mm)	(bar)	(mm)	(bar)	(s)	(min : s)	(s)	(s)	(bar)	(min)
160	13	1	1,3	280	04:40	8	13	13	24
200	21	1	2	330	05:30	9	16	20	29
250	32	1,5	3,2	370	06:10	10	20	32	35
315	50	2	5	420	07:00	12	24	50	44

PP-RCT 125 WITH FIBERGLASS SDR 11 | S 5.0 (MACHINE: OMISA SP 250 EVO - SP 315 EVO)

NOMINAL DIAMETER	ADJUSTMENT		HEAT			WELDING		COOLING	
	PRESSURE P_1*	BURR HEIGHT Y	PRESSURE P_2	TIME T_2		MAXIMUM MANIPULATION TIME T_3	CONTACT TIME T_4	PRESSURE P_5*	TIME T_5
(mm)	(bar)	(mm)	(bar)	(s)	(min : s)	(s)	(s)	(bar)	(min)
160	13	1	1,3	280	04:40	8	13	13	24
200	21	1	2	330	05:30	9	16	20	29
250	32	1,5	3,2	370	06:10	10	20	32	35

PP-RCT 125 WITH FIBERGLASS SDR 17 | S 8.0 (MACHINE: OMISA SP 250 EVO - SP 315 EVO)

NOMINAL DIAMETER	ADJUSTMENT		HEAT			WELDING		COOLING	
	PRESSURE P_1*	BURR HEIGHT Y	PRESSURE P_2	TIME T_2		MAXIMUM MANIPULATION TIME T_3	CONTACT TIME T_4	PRESSURE P_5*	TIME T_5
(mm)	(bar)	(mm)	(bar)	(s)	(min : s)	(s)	(s)	(bar)	(min)
160	9	1	0,9	210	03:30	7	9	9	16
200	14	1	1,4	250	04:10	7	11	14	20
250	21	1	2,1	285	04:45	8	13	21	24
315	34	1	3,4	340	05:40	9	17	34	30

* Add to this value the previously calculated drag pressure (Pt) value.

Note: the above parameters are only reference values, not guaranteed values! The values are extrapolated from the standards (DVS 2207/11 /12-208) to the PP.

PP-R 100 WITH FIBERGLASS SDR 7,4 | S 3.2 (MACHINE: OMISA SP 500 EVO - SP 630 EVO)

NOMINAL DIAMETER	ADJUSTMENT		HEAT			WELDING		COOLING	
	PRESSURE P_1*	BURR HEIGHT Y	PRESSURE P_2	TIME T_2		MAXIMUM MANIPULATION TIME T_3	CONTACT TIME T_4	PRESSURE P_5*	TIME T_5
(mm)	(bar)	(mm)	(bar)	(s)	(min : s)	(s)	(s)	(bar)	(min)
200	11	2	1,1	410	06:50	11	23	11	42
250	17	2	1,6	460	07:40	13	29	17	51

PP-R 100 WITH FIBERGLASS SDR 11 | S 5.0 (MACHINE: OMISA SP 500 EVO - SP 630 EVO)

NOMINAL DIAMETER	ADJUSTMENT		HEAT			WELDING		COOLING	
	PRESSURE P_1*	BURR HEIGHT Y	PRESSURE P_2	TIME T_2		MAXIMUM MANIPULATION TIME T_3	CONTACT TIME T_4	PRESSURE P_5*	TIME T_5
(mm)	(bar)	(mm)	(bar)	(s)	(min : s)	(s)	(s)	(bar)	(min)
200	8	1	0,7	330	05:30	9	16	8	29
250	12	1,5	1,1	370	06:10	10	20	12	35
315	18	2	1,8	420	07:00	12	24	18	44
355	23	2	2,3	450	07:30	12	28	23	49
400	29	2	2,9	480	08:00	14	31	30	54

PP-RCT 125 WITH FIBERGLASS SDR 11 | S 5.0 (MACHINE: OMISA SP 500 EVO - SP 630 EVO)

NOMINAL DIAMETER	ADJUSTMENT		HEAT			WELDING		COOLING	
	PRESSURE P_1*	BURR HEIGHT Y	PRESSURE P_2	TIME T_2		MAXIMUM MANIPULATION TIME T_3	CONTACT TIME T_4	PRESSURE P_5*	TIME T_5
(mm)	(bar)	(mm)	(bar)	(s)	(min : s)	(s)	(s)	(bar)	(min)
200	8	1	0,7	330	05:30	9	16	8	29
250	12	1,5	1,1	370	06:10	10	20	12	35

PP-RCT 125 WITH FIBERGLASS SDR 17 | S 8.0 (MACHINE: OMISA SP 500 EVO - SP 630 EVO)

NOMINAL DIAMETER	ADJUSTMENT		HEAT			WELDING		COOLING	
	PRESSURE P_1*	BURR HEIGHT Y	PRESSURE P_2	TIME T_2		MAXIMUM MANIPULATION TIME T_3	CONTACT TIME T_4	PRESSURE P_5*	TIME T_5
(mm)	(bar)	(mm)	(bar)	(s)	(min : s)	(s)	(s)	(bar)	(min)
200	5	1	0,5	250	04:10	7	11	5	20
250	8	1	0,8	285	04:45	8	13	8	24
315	12	1	1,2	340	05:40	9	17	12	30
355	16	1,5	1,6	350	05:50	10	19	16	33
400	20	1,5	2	380	06:20	10	20	20	37

* Add to this value the previously calculated drag pressure (Pt) value.

Note: the above parameters are only reference values, not guaranteed values! The values are extrapolated from the standards (DVS 2207/11 /12-208) to the PP.

WELD-ON SADDLE

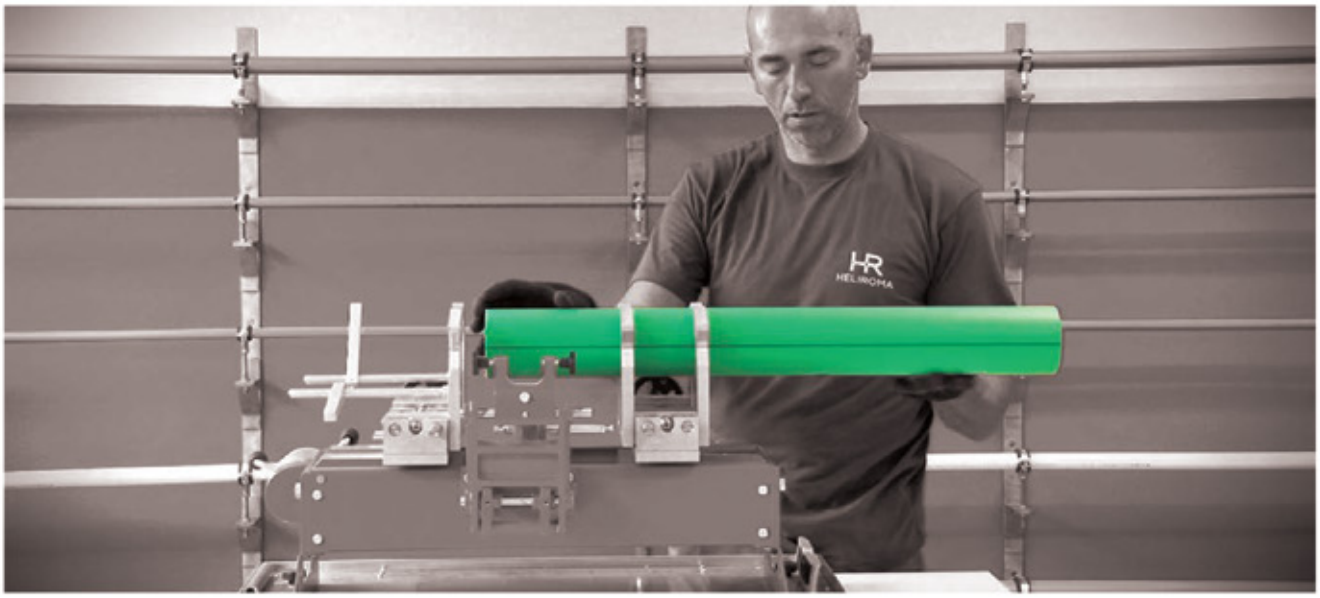

SCAN TO SEE
INSTRUCTION VIDEO

1) The first step is to drill through the pipe wall at the intended outlet point by using the drill tool referenced in HELIROMA range of products.

2) Remove burrs or other debris from the pipe welding area.

3) The welding device / saddle welding tool must have reached the required operating temperature of 260°C.

4) The welding surfaces have to be clean and dry before starting the welding process.

5) Insert the heating tool on the concave side of the weld-in saddle tool into the hole drilled in the pipe wall until the tool is fully in contact with the outer wall of the pipe.

6) Start inserting the fitting into the heating tool until the end and start counting the heating time.

7) After the welding tool has been removed, the weld-in saddle is immediately inserted into the heated, drilled hole. Then the fitting should be pressed on the pipe for about 15 seconds.

8) After cooling for 10 minutes the connection can be exposed to its full loading.

SOCKET WELDING WITH AN ELECTRIC MACHINE

SCAN TO SEE
INSTRUCTION VIDEO

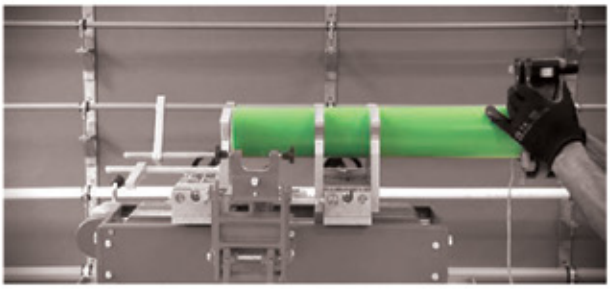

1) Make sure the machine and scraper are working properly.

2) Place the scraper on a flat surface to ensure its stability.

3) Insert the pipe in the scraper, ensuring that the scraper blade is placed facing the pipe.

4) Adjust the handle that allows the diameter and blade handle to be defined until they are tightly fitted to the pipe;

5) Check the depth of the fitting and mark the same length on the pipe in order to ensure that scraping does not exceed your needs;

6) Start the scraping process, rotating the scraper in circular movements (clockwise) until a homogeneous thick "tape" is obtained. Continue the process until you reach the mark previously made on the pipe;

7) Upon completion, insert the pipe until reaching the catch inside the pipe;

8) After the pipe/s has/have been properly inserted in the fitting, switch the electro-welding machine on (IMPORTANT: ensure constant current charge); switch on machine button (ON/OFF) and place the terminals on the fitting;

9) Check necessary welding time according to the fitting to be used, see label on the fitting.

10) Set the necessary welding time on display by pressing the (+) and (-) button until the intended time is set;

11) Start welding process, press OK button, and start countdown of the pre-set time;

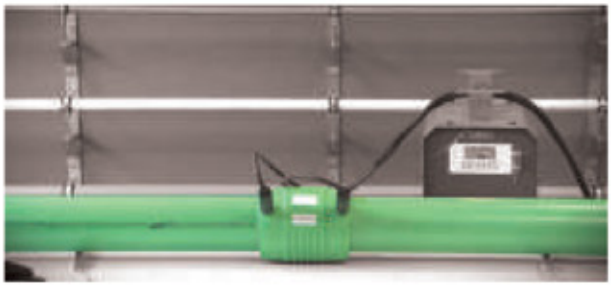

12) When the countdown has finished, the machine will beep and the display will show the same message (Prn), which means that the welding is finished. We can confirm the protruding pivots of the fittings;

13) Remove the fitting's terminals and start a new electro- welding process if necessary. (e.g. 90º bend of 110-250 seconds).

FLANGED CONNECTIONS

The connection between systems with flanges must be done with the sealing surface always aligned and parallel to each other. All materials must be clean and undamaged.

The tightening of flange connections immediately after welding must be avoided.

The screw length should be selected so that screw thread is as flush as possible, until two threads from nut. To distribute the force of the screw head and the nut over a large are, washers can be used.

Along the connection seal, the screw joints must be tightened diagonally and evenly. To connections exposed to a mutual load, all screw joint must be verified and retightened, if necessary.

PIPE REPAIR WITH REPAIR PIN

Damaged pipes may be repaired by means of pipe repair pin. To that operation is necessary the welding tool, a repair bush and a polywelder.

The processing steps are:

1) Drain pipe, the surface must be dry;

2) Uncover damaged pipe;

3) Drill damaged area of pipe out to a correct diameter (7 mm or 11 mm) at a right angle to the pipe;

4) Heat up drill hole and repair stick on the welding machine for 10 seconds;

5) Insert repair stick immediately;

6) Cut off protruding end of repair stick;

7) The repaired area of pipe has reached full strength after approximately 5 minutes.

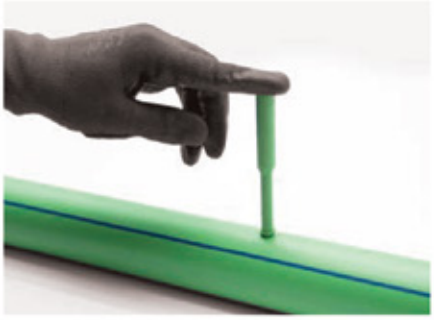

SYSTEM FEATURES

All HELIROMA pipes and fittings are produced with the best quality raw material, purchased from the most qualified providers on the market, the polypropylene copolymer random PP-R 100 or the polypropylene copolymer random with modified crystallinity–PP-RCT 125. A heat stabilized raw material that gives a much higher safety factor on piping. An opaque system with no danger of algae development.

The connections in HELIROMA's piping system are made using socket welding, butt fusion, and electrofusion, all are a simple process which actually turns the pipe and fitting into a single piece. The homogeneous connection that is chemically indistinguishable from the rest of the material, there are no solvents, glues or different connection, eliminating weak points and harmful chemicals from the system. The heat fusion joints maintain the same properties as the pipe itself, so physical stresses will not damage their integrity.

The extrapolated service life of HELIROMA PP-R systems is more than 50 years. Punctual operation temperature of 100°C, are admissible, continuous operation from 70-90°C reduce the life expectancy of the system.

HELIROMA systems can be used for several applications, the pressure and temperature conditions according to table – Permissible working pressure, are valid, ever apply the recommended safety factor. HELIROMA systems have a high performance which last longer with less maintenance, adding value to each installation.

The experience in production and application of PP-R systems and the current ambition of continuous development led HELIROMA to numerous improvements of production process and products. PP-R systems meet the highest requirements of a global market in the potable water and heating technology, in the air-conditioning and chilling engineering, in the industrial and agriculture applications, as well in shipbuilding.

APPLICATION - POTABLE WATER INSTALLATIONS

Potable water is one of the most controlled commodity goods. The choice of a drinkable water pipe system and its material is utterly important.

PP-R is a hydrophobic low-friction material, meaning that it repels polarized compounds including water. PP-R systems are the perfect fit for drinkable water installations. It does not corrode or erode and will not leach into the water supply.

Choosing a material that does not react or interact with water or other fluids ensures that chemicals from de pipe and fittings will never transfer to drinking water.

The growing use of pipes made of polypropylene in drinkable water applications confirm the highly hygienic qualities of the material as well as its physiologically and microbiologically neutrality.

PP-R solutions from HELIROMA are the optimal solution for drinking water applications, the hygienic suitability of the material is independently verified through test done from several accredited national and international entities.

APPLICATION - SPECIFIC ENGINEERING

All PP-R pipes from HELIROMA are engineered for optimal performance to a wide variety of applications.

HELIROMA successfully developed solutions with different structures and raw materials, that meet the different and growing demand of new markets and applications.

HELIROMA's solutions allow to optimize efficiency and economics of the installation with a higher safety factor.

SOUND INSULATION

PP-R systems provide good sound insulation. Sound propagation is much lower compared to metallic systems.

CORROSION RESISTANCE

HELIROMA's PP-R 100 and PP-RCT 125 are raw materials very resistant to any form of change of the material wall. While other kind of piping material lose performance due scaling and corrosion.

HELIROMA piping, even after long use, retains it original flow performance and efficiency.

Corrosion can reduce the wall thickness of a metal pipe around 3% year, resulting in lost efficiency and increased pumping energy. This can add up the installation costs significantly.

HELIROMA pipes don't corrode or scale, so they continue delivering high efficiency and performance year after year.

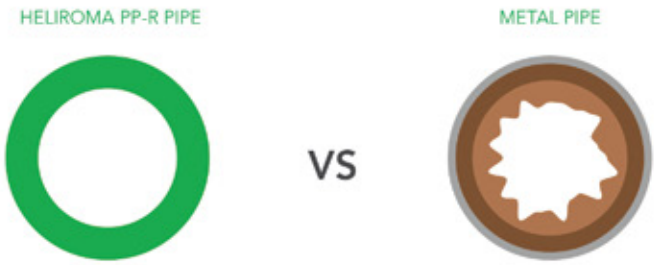

FULL SYSTEM RANGE

HELIROMA piping systems can be used in nearly any pressure application and range in size from 20 to 400 mm. This allows installers to use one type of pipe for an entire system rather than mixing multiple materials and joining methods.

An entire project can be done using HELIROMA pipes, eliminating the need for multiple tools sets and maintenance programs.

Transitions with flanges or threaded fittings make combining HELIROMA pipe with other systems and components in a simple and easy way.

All systems from PP-R HELIROMA family, can be combined on installations, PP-R 100 SDR 6 and SDR 7,4 - HELISYSTEM, PP-R 100 + FG SDR 7,4 - ROMAFASER PP-R 100 + FG SDR 11 – ROMAKLIMA, PP-RCT 125 + FG SDR 11– ROMAFASER CT PP-RCT 125 + FG SDR 17 – ROMAKLIMA CT.

SUSTAINABILITY

HELIROMA is a company future-oriented that has it's production process and products aligned with sustainability and energy efficiency guidelines and best practices, fulfilling all ecological and environmental standards.

All raw materials used on the production of pipes and fittings are controlled with several tests in different laboratories to ensure that nothing harmful is ever put into our final product.

Pipes and fittings made of polypropylene have a service life of more than 50 years, rarely need maintenance or extensive reparations, it does not generate disposal waste.

Furthermore, polypropylene is environmentally friendly material, fully recyclable and can be re-used in other applications on different areas.

WARRANTY

All supplied products by HELIROMA installed according all procedures in HELIROMA catalogue, have 10 years warranty against manufacturing defects.

For further information, consult the general terms and conditions.

PERMISSIBLE WORKING PRESSURE - PP-R 100

Non potable water applications - heating systems or closed systems

TEMPERATURE (°C)	PERMISSIBLE WORKING PRESSURE (bar)		
	LIFETIME (years)	HELISYSTEM P-R 100 SDR 6 S2.5	HELISYSTEM PP-R 100 SDR 7,4 S3.2
10	1	42,1	33,4
	5	39,7	31,5
	10	38,6	30,7
	25	37,4	29,7
	50	36,4	28,9
20	1	35,9	28,5
	5	33,7	26,8
	10	32,8	26,1
	25	31,7	25,2
	50	30,9	24,5
30	1	30,5	24,2
	5	28,6	22,7
	10	27,8	22,1
	25	26,8	21,3
	50	26,1	20,7
40	1	25,9	20,6
	5	24,2	19,2
	10	23,5	18,7
	25	22,6	18
	50	22	17,4
50	1	21,9	17,4
	5	20,4	16,2
	10	19,8	15,6
	25	19	15,1
	50	18,5	14,7
60	1	18,5	14,7
	5	17,2	13,6
	10	16,6	13,2
	25	16	12,7
	50	15,5	12,3

CONTINUED >

CONTINUED >

TEMPERATURE (°C)	PERMISSIBLE WORKING PRESSURE (bar)		
	LIFETIME (years)	HELISYSTEM P-R 100 SDR 6 S2.5	HELISYSTEM PP-R 100 SDR 7,4 S3.2
70	1	15,5	12,3
	5	14,4	11,4
	10	13,9	11,1
	25	12,1	9,6
	50	10,2	8,1
80	1	13	10,3
	5	11,5	9,1
	10	9,7	7,7
	25	7,8	6,2
95	1	9,2	7,3
	5	6,2	4,9

Safety factor - 1,25.

The referenced service lifetime does not consider installation changes, such as: high concentration of disinfection agents, metallic materials out of specification, neither operating temperature and/or pressure malfunctions.

For sanitary water installations, working pressures should be reduced by 15%, for the same service lifetime. The maximum allowable temperature is 70ºC, which corresponds to thermal disinfection temperature and not to continuous operating temperature. Disinfection processes should be carried out according to mandatory regulations and under no circumstance a combination of different processes should be used.

In case of butt-welded pipes and/or fittings, allowable operating pressures should be reduced by 25%.

PERMISSIBLE WORKING PRESSURE - PP-R 100 + FG

Potable water applications - open systems in permanent operation

TEMPERATURE (°C)	PERMISSIBLE WORKING PRESSURE (bar)		
	LIFETIME (years)	ROMAFASER PP-R 100 + FG SDR 7,4 S3.2	ROMAKLIMA PP-R 100 + FG SDR 11 S5.0
20	1	28,6	23,8
	5	26,8	22,3
	10	26,1	21,7
	25	25,3	21,0
	50	24,5	20,4
30	1	24,3	20,2
	5	22,8	18,9
	10	22,0	18,4
	25	21,3	17,8
	50	20,7	17,3
40	1	20,5	17,1
	5	19,2	16,0
	10	18,7	15,6
	25	18,0	15,0
	50	17,5	14,6
50	1	17,5	14,5
	5	16,2	13,5
	10	15,7	13,1
	25	15,2	12,6
	50	14,7	12,2
60	1	12,2	13,5
	5	11,4	13
	10	11	12,7
	25	10,6	12,4
	50	10,3	12,2
70	1	12,4	10,3
	5	11,4	9,6
	10	11,1	9,2
	25	9,6	8,0
	50	8,1	6,8

Safety factor - 1,5.
The referenced service lifetime does not consider installation changes, such as: high concentration of disinfection agents, metallic materials out of specification, neither operating temperature and/or pressure malfunctions.
For sanitary water installations, working pressures should be reduced by 15%, for the same service lifetime. The maximum allowable temperature is 70°C, which corresponds to thermal disinfection temperature and not to continuous operating temperature. Disinfection processes should be carried out according to mandatory regulations and under no circumstance a combination of different processes should be used.
In case of butt-welded pipes and/or fittings, allowable operating pressures should be reduced by 25%.

PERMISSIBLE WORKING PRESSURE - PP-RCT 125 + FG

Potable water applications - open systems in permanent operation

TEMPERATURE °C	PERMISSIBLE WORKING PRESSURE (bar)		
	LIFETIME (years)	ROMAFASER CT PP-RCT 125 + FG SDR 11 S5.0	ROMAKLIMA CT PP-RCT 125 + FG SDR 17 S8.0
20	1	25,0	12,5
	5	24,2	12,1
	10	23,9	12,0
	25	23,5	11,7
	50	23,1	11,6
30	1	21,7	10,8
	5	20,9	10,5
	10	20,6	10,3
	25	20,2	10,1
	50	19,9	10,0
40	1	18,6	10,6
	5	18,0	10,5
	10	17,7	10,2
	25	17,3	10,2
	50	17,1	10,0
50	1	15,9	9,4
	5	15,3	9,3
	10	15,1	9,3
	25	14,7	8,7
	50	14,5	8,6
60	1	8,1	8,1
	5	7,9	7,9
	10	7,5	7,5
	25	7,4	7,4
	50	7,3	7,3
70	1	11,3	7,3
	5	10,9	7,2
	10	10,7	7,2
	25	10,4	7,1
	50	10,2	7,0

Safety factor - 1,5.

The referenced service lifetime does not consider installation changes, such as: high concentration of disinfection agents, metallic materials out of specification, neither operating temperature and/or pressure malfunctions.

For sanitary water installations, working pressures should be reduced by 15%, for the same service lifetime. The maximum allowable temperature is 70ºC, which corresponds to thermal disinfection temperature and not to continuous operating temperature. Disinfection processes should be carried out according to mandatory regulations and under no circumstance a combination of different processes should be used.

In case of butt-welded pipes and/or fittings, allowable operating pressures should be reduced by 25%.

Chemically inert material

Low thermal conductivity

Application-specific engineering

Corrosion and limescale resistant

Opaque – prevents microbiological buildup

Lower pressure loss

Low roughness

SYSTEM GENERAL ADVANTAGES

- Durable material
- Sound insulation
- Lightweight
- Easy handling and installation
- Full system compatibility
- High environmental compatibility
- Consistent quality

CERTIFICATIONS

HELIROMA piping systems comply with the following national and international standards and regulations.

The high resilience of PP-R systems is checked regularly through several tests during the production and at laboratory.

STANDARDS:

EN 15874-1: Plastics piping systems for hot and cold water installations - Polypropylene (PP). - General.

EN 15874-2: Plastics piping systems for hot and cold water installations - Polypropylene (PP). - Pipes.

EN 15874-3: Plastics piping systems for hot and cold water installations - Polypropylene (PP). – Fittings.

EN 15874-5: Plastics piping systems for hot and cold water installations - polypropylene (PP) - fitness for purpose of the system.

EN 15874-7: Plastics piping systems for hot and cold water installations - polypropylene (PP) - guidance for the assessment of conformity (technical specification).

DIN 8077: Polypropylene (PP) pipes - Dimensions.

DIN 8078: Polypropylene (PP) pipes - General quality requirements and testing.

ASTM F2389: Standard Specification for Pressure-rated Polypropylene (PP) Piping Systems.

DIN 16962: Pipe fittings and joint assemblies for polypropylene (PP) pressure pipes.

DIN EN1092: Flanges and their joints - Circular flanges for pipes, valves, fittings and accessories, PN designated - Part 1: Steel flanges.

ISO 15494:2015: Plastics piping systems for industrial applications — Polybutene (PB), polyethylene (PE), polyethylene of raised temperature resistance (PE-RT), crosslinked polyethylene (PE-X), polypropylene (PP) — Metric series for specifications for components and the system.

RP 01.16: Specific rules for polypropylene (PP) systems for hot and cold water installations.

RP 01.72: Specific rules for polypropylene (PP-R) and fiberglass (GF) piping systems for hot and cold water installations inside buildings.

RP 01.78: Specific rules for polypropylene random with modified crystal structure (PP-RCT) and fiberglass (FG) piping systems for hot and cold water installations inside buildings.

W544: Plastic pipes in the drinking water installation -requirements and testing.

EN ISO 9001: Quality management systems: requirements.

PP-R FITTINGS

Heliroma

PP-R 100 PIPE SDR 6 HELISYSTEM

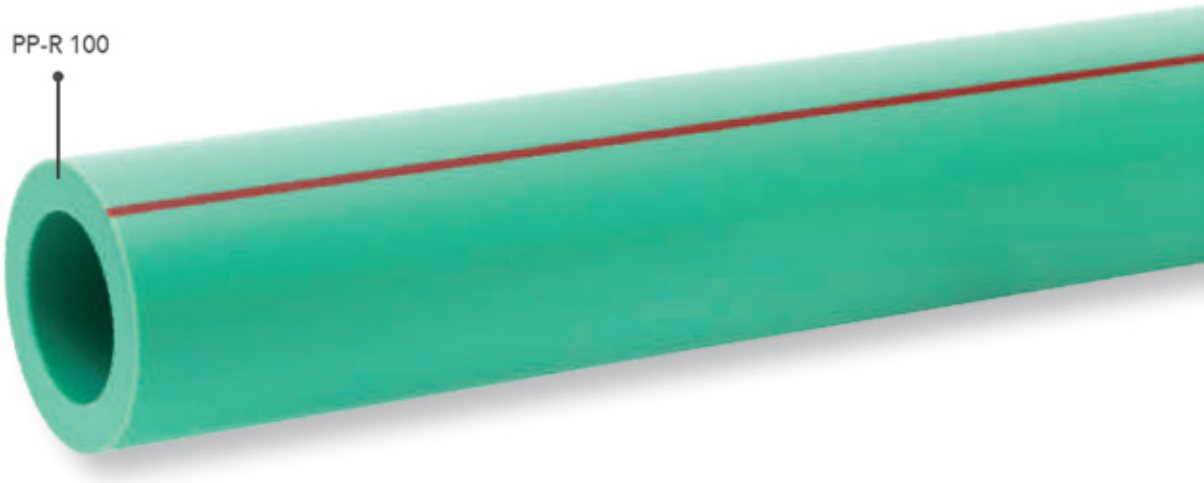

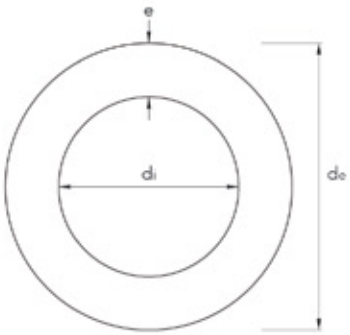

CHARACTERISTICS

SUPPLIED IN	4 m bars
TYPE OF WELDING	Socket | Electrofusion | Butt Welding
SERIES	2.5
STANDARDS	EN ISO 15874 | DIN 8077 | DIN 8078 DIN 16962 | ASTM F 2389 | RP 0116

REF	d_n NOMINAL DIAMETER	d_e OUTSIDE DIAMETER		e THICKNESS		d_i INSIDE DIAMETER		WEIGHT	MAX WEIGHT W/ WATER [12]	COLOUR	
		Min.	Max.	Min.	Max.	Min.	Max.				
	(mm)							(kg/m)			
P-16020	20	20,0	20,3	3,4	3,9	12,2	13,5	0,175	0,318	✓	✓
P-16025	25	25,0	25,3	4,2	4,8	15,4	16,9	0,266	0,490	✓	✓
P-16032	32	32,0	32,3	5,4	6,1	19,8	21,5	0,438	0,801	✓	✓
P-16040	40	40,0	40,4	6,7	7,5	25,0	27,0	0,678	1,251	✓	✓
P-16050	50	50,0	50,5	8,3	9,3	31,4	33,9	1,036	1,939	✓	✓
P-16063	63	63,0	63,6	10,5	11,7	39,6	42,6	1,638	3,063	✓	✓
P-16075	75	75,0	75,7	12,5	13,9	47,2	50,7	2,340	4,359	✓	✓
P-16090	90	90,0	90,9	15,0	16,6	56,8	60,9	3,353	6,266	✓	✓
P-160110	110	110,0	111,0	18,3	20,3	69,4	74,4	4,900	9,247	✓	✓

[12] Water max. weight calculated with ρ_{H_2O} at 4°C.

PP-R 100 PIPE SDR 7,4 HELISYSTEM

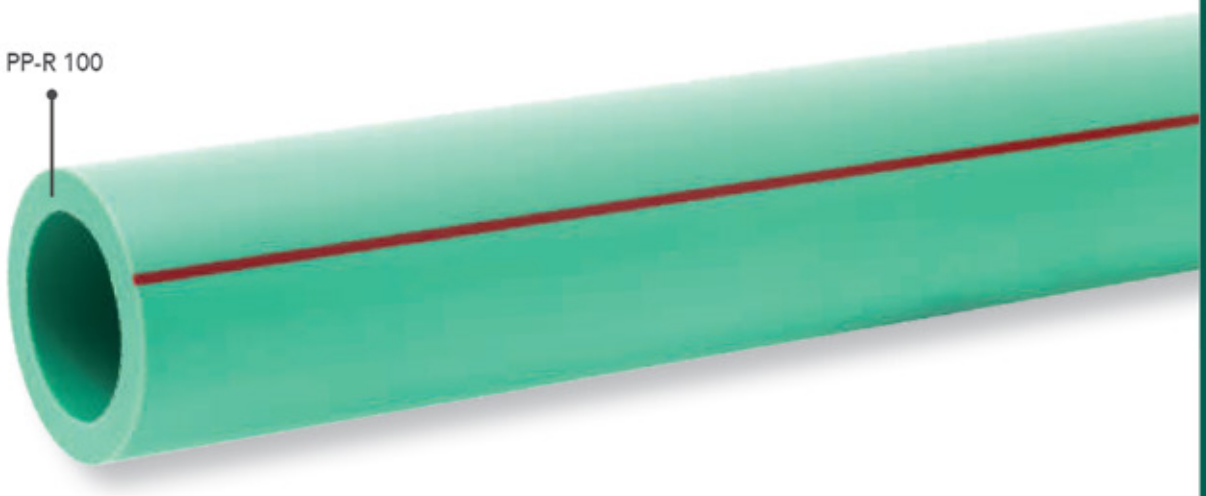

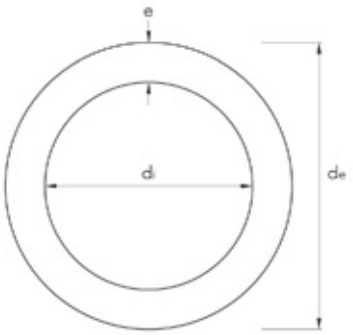

CHARACTERISTICS

SUPPLIED IN	4 m bars
TYPE OF WELDING	Socket | Electrofusion | Butt Welding
SERIES	3.2
STANDARDS	EN ISO 15874 | DIN 8077 | DIN 8078 DIN 16962 | ASTM F 2389 | RP 0116

REF	d_n NOMINAL DIAMETER	d_e OUTSIDE DIAMETER		e THICKNESS		d_i INSIDE DIAMETER		WEIGHT	MAX WEIGHT W/ WATER [12]	COLOUR
		Min.	Max.	Min.	Max.	Min.	Max.			
	(mm)							(kg/m)		
P-15020	20	20,0	20,3	2,8	3,2	13,6	14,7	0,148	0,318	✓
P-15025	25	25,0	25,3	3,5	4,0	17,0	18,3	0,236	0,499	✓
P-15032	32	32,0	32,3	4,4	5,0	22,0	23,5	0,380	0,814	✓
P-15040	40	40,0	40,4	5,5	6,2	27,6	29,4	0,590	1,269	✓
P-15050	50	50,0	50,5	6,9	7,7	34,6	36,7	0,890	1,948	✓
P-15063	63	63,0	63,6	8,6	9,6	43,8	46,4	1,435	3,126	✓
P-15075	75	75,0	75,7	10,3	11,5	52,0	55,1	1,975	4,359	✓
P-15090	90	90,0	90,9	12,3	13,7	62,6	66,3	2,845	6,297	✓
P-150110	110	110,0	111,0	15,1	16,8	76,4	80,8	4,280	9,408	✓
P-150125[1]	125	125,0	-	-	-	-	-	-	-	✓
P-150160[1]	160	160,0	-	-	-	-	-	-	-	✓

[1] Available on demand and subject to MOQ. | [12] Water max. weight calculated with ρ_{H_2O} at 4ºC.

PP-R 100 PIPE WITH FIBERGLASS SDR 7,4 ROMAFASER

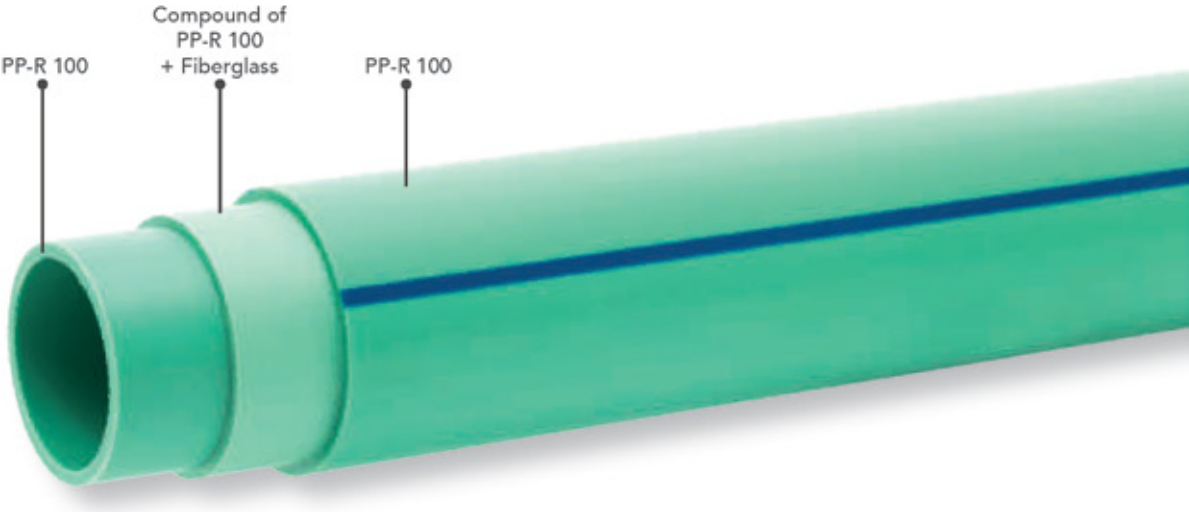

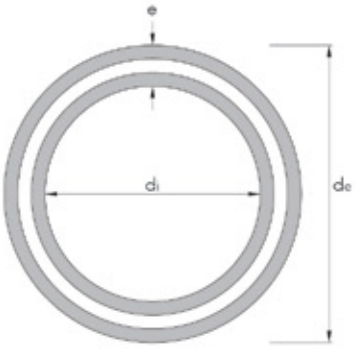

CHARACTERISTICS

SUPPLIED IN	4 m bars
TYPE OF WELDING	Socket | Electrofusion | Butt Welding
SERIES	3.2
STANDARDS	EN ISO 15874 | DIN 8077 | DIN 8078 DIN 16962 | ASTM F 2389 | RP 001.72

REF	d_n NOMINAL DIAMETER	d_e OUTSIDE DIAMETER		e THICKNESS		d_i INSIDE DIAMETER		WEIGHT	MAX WEIGHT W/ WATER [12]	COLOUR	
		Min.	Max.	Min.	Max.	Min.	Max.				
	(mm)							(kg/m)			
P-16020-F	20	20,0	20,3	2,8	3,2	13,6	14,7	0,153	0,350	✓	✓
P-16025-F	25	25,0	25,3	3,5	4,0	17,0	18,3	0,246	0,509	✓	✓
P-16032-F	32	32,0	32,3	4,4	5,0	22,0	23,5	0,390	0,824	✓	✓
P-16040-F	40	40,0	40,4	5,5	6,2	27,6	29,4	0,600	1,279	✓	✓
P-16050-F	50	50,0	50,5	6,9	7,7	34,6	36,7	0,919	1,977	✓	✓
P-16063-F	63	63,0	63,6	8,6	9,6	43,8	46,4	1,433	3,124	✓	✓
P-16075-F	75	75,0	75,7	10,3	11,5	52,0	55,1	2,061	4,445	✓	✓
P-16090-F	90	90,0	90,9	12,3	13,7	62,6	66,3	2,933	6,385	✓	✓
P-160110-F	110	110,0	111,0	15,1	16,8	76,4	80,8	4,344	9,472	✓	✓
P-160125-F[1]	125	125,0	-	-	-	-	-	-	-	✓	
P-160160-F[1]	160	160,0	-	-	-	-	-	-	-	✓	
P-160200-F[1]	200	200,0	-	-	-	-	-	-	-	✓	
P-160250-F[1]	250	250,0	-	-	-	-	-	-	-	✓	

[1] Available on demand and subject to MOQ. | [12] Water max. weight calculated with ρ_{H_2O} at 4°C.

PP-R 100 PIPE WITH FIBERGLASS SDR 11 ROMAKLIMA

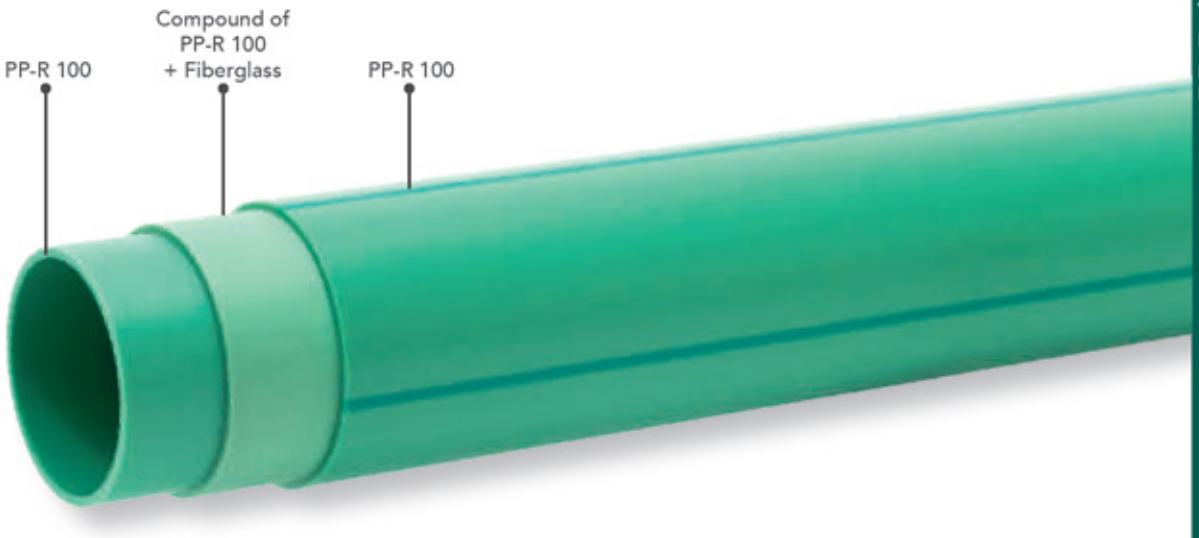

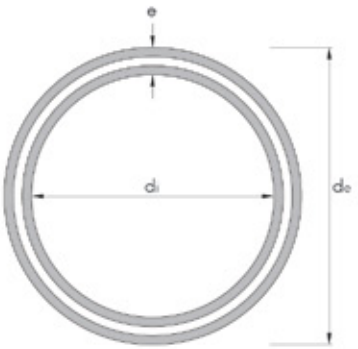

CHARACTERISTICS

SUPPLIED IN	4 m bars
TYPE OF WELDING	Socket | Electrofusion | Butt Welding
SERIES	5.0
STANDARDS	EN ISO 15874 | DIN 8077 | DIN 8078 DIN 16962 | ASTM F 2389 | RP 001.72

REF	d_n NOMINAL DIAMETER	d_e OUTSIDE DIAMETER		e THICKNESS		d_i INSIDE DIAMETER		WEIGHT	MAX WEIGHT W/ WATER [12]	COLOUR
		Min.	Max.	Min.	Max.	Min.	Max.			
	(mm)							(kg/m)		
P-14020-FR	20 SDR 7,4	20,0	20,3	2,8	3,2	13,6	14,7	0,153	0,323	✓
P-14025-FR	25 SDR 7,4	25,0	25,3	3,5	4,0	17,0	18,3	0,246	0,509	✓
P-14032-FR	32	32,0	32,3	2,9	3,3	25,4	26,5	0,278	0,830	✓
P-14040-FR	40	40,0	40,4	3,7	4,2	31,6	33,0	0,422	1,277	✓
P-14050-FR	50	50,0	50,5	4,6	5,2	39,6	41,3	0,644	1,984	✓
P-14063-FR	63	63,0	63,6	5,8	6,5	50,0	52,0	1,034	3,158	✓
P-14075-FR	75	75,0	75,7	6,8	7,6	59,8	62,1	1,500	4,529	✓
P-14090-FR	90	90,0	90,9	8,2	9,2	71,6	74,5	2,200	6,559	✓
P-140110-FR	110	110,0	111,0	10,0	11,1	87,8	91,0	3,122	9,626	✓
P-140125-FR[1]	125	125,0	126,2	11,4	12,7	99,6	103,4	4,020	12,417	✓
P-140160-FR[1]	160	160,0	161,5	14,6	16,2	127,6	132,3	6,439	20,186	✓
P-140200-FR[1]	200	200	201,8	18,2	20,2	159,6	165,4	9,950	31,436	✓
P-140250-FR[1]	250	250	252,3	22,7	25,1	199,8	206,9	15,500	49,121	✓
P-140315-FR[1]	315	315,0	-	-	-	-	-	-	-	✓
P-140355-FR[1]	355	355,0	-	-	-	-	-	-	-	✓
P-140400-FR[1]	400	400,0	-	-	-	-	-	-	-	✓

[1] Available on demand and subject to MOQ. | [12] Water max. weight calculated with ρ_{H_2O} at 4°C.

PP-R 100 PIPE WITH FIBERGLASS SDR 7,4 ANTI-UV ROMAFASER ANTI-UV

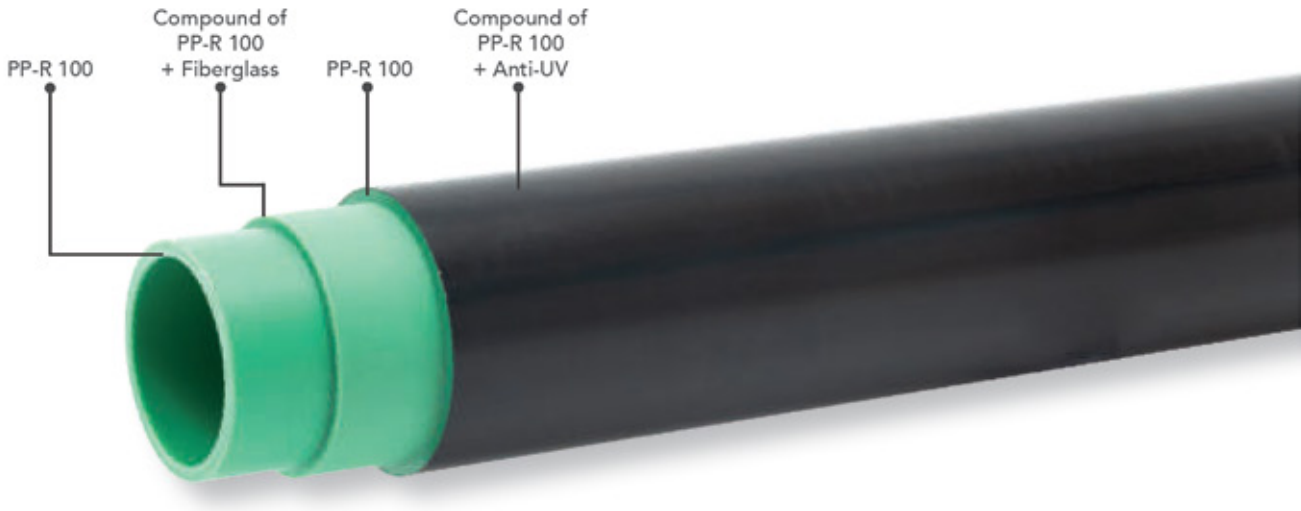

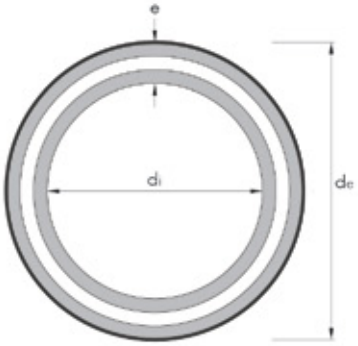

CHARACTERISTICS

SUPPLIED IN	4 m bars
TYPE OF WELDING	Socket | Electrofusion | Butt Welding
SERIES	3.2
STANDARDS	EN ISO 15874 | DIN 8077 | DIN 8078 DIN 16962 | ASTM F 2389 | RP 001.72

REF	d_n NOMINAL DIAMETER	d_e OUTSIDE DIAMETER		e THICKNESS		d_i INSIDE DIAMETER		WEIGHT	MAX WEIGHT W/ WATER [12]	COLOUR ●
		Min.	Max.	Min.	Max.	Min.	Max.			
	(mm)							(kg/m)		
P-16020-FUV	20	20,0	20,3	2,8	3,2	13,6	14,7	0,153	0,350	✓
P-16025-FUV	25	25,0	25,3	3,5	4,0	17,0	18,3	0,246	0,509	✓
P-16032-FUV	32	32,0	32,3	4,4	5,0	22,0	23,5	0,390	0,824	✓
P-16040-FUV	40	40,0	40,4	5,5	6,2	27,6	29,4	0,600	1,279	✓
P-16050-FUV	50	50,0	50,5	6,9	7,7	34,6	36,7	0,919	1,977	✓
P-16063-FUV	63	63,0	63,6	8,6	9,6	43,8	46,4	1,433	3,124	✓
P-16075-FUV	75	75,0	75,7	10,3	11,5	52,0	55,1	2,061	4,445	✓

[12] Water max. weight calculated with ρ_{H_2O} at 4°C.

PP-RCT 125 PIPE WITH FIBERGLASS SDR 11 ROMAFASER CT

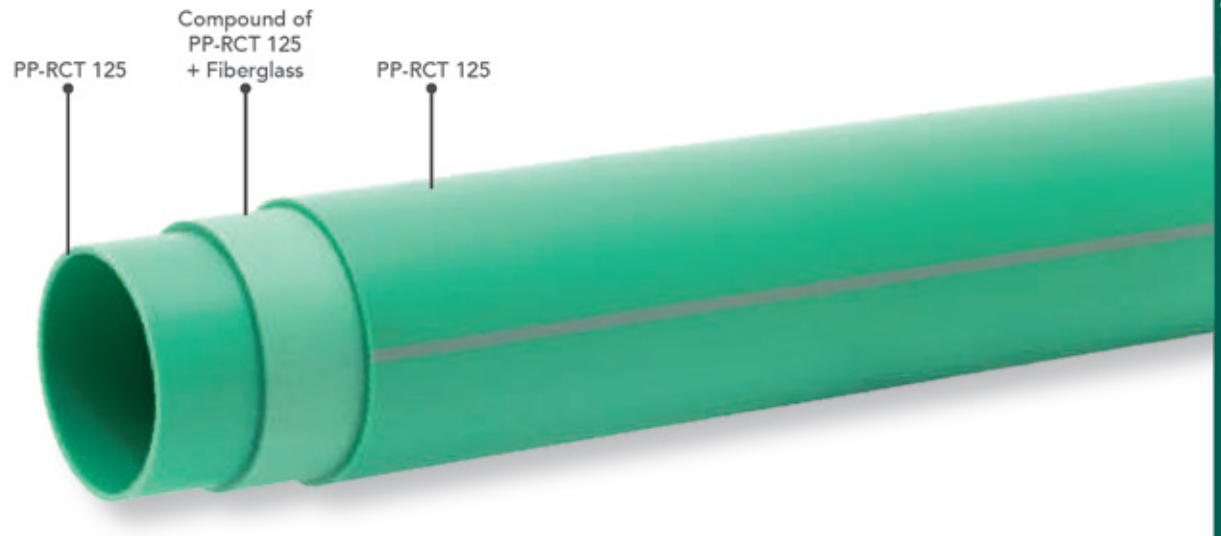

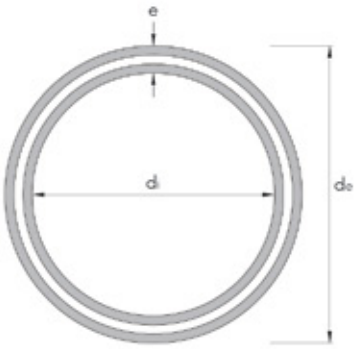

CHARACTERISTICS

SUPPLIED IN	ø 20-125 mm - 4 m bars | ø 160-250 mm - 5,8 m bars
TYPE OF WELDING	Socket | Electrofusion | Butt Welding
SERIES	5.0
STANDARDS	EN ISO 15874 | DIN 8077 | DIN 8078 DIN 16962 | ASTM F 2389 | RP 001.78

REF	d_n NOMINAL DIAMETER	d_e OUTSIDE DIAMETER		e THICKNESS		d_i INSIDE DIAMETER		WEIGHT	MAX WEIGHT W/ WATER [12]	COLOUR
		Min.	Max.	Min.	Max.	Min.	Max.			
	(mm)							(kg/m)		
P-16020-FCT	20 SDR 7,4	20,0	20,3	2,8	3,2	13,6	14,7	0,153	0,323	✓
P-16025-FCT	25 SDR 7,4	25,0	25,3	3,5	4,0	17,0	18,3	0,233	0,496	✓
P-16032-FCT	32 SDR 7,4	32,0	32,3	4,4	5,0	22,0	23,5	0,387	0,821	✓
P-16040-FCT	40	40,0	40,4	3,7	4,2	31,6	33,0	0,421	1,276	✓
P-16050-FCT	50	50,0	50,5	4,6	5,2	39,6	41,3	0,663	2,003	✓
P-16063-FCT	63	63,0	63,6	5,8	6,5	50,0	52,0	1,032	3,156	✓
P-16075-FCT	75	75,0	75,7	6,8	7,6	59,8	62,1	1,459	4,488	✓
P-16090-FCT	90	90,0	90,9	8,2	9,2	71,6	74,5	2,110	6,469	✓
P-160110-FCT	110	110,0	111	10,0	11,1	87,8	91,0	3,083	9,587	✓
P-160125-FCT	125	125,0	126,2	11,4	12,7	99,6	103,4	4,000	12,397	✓
P-160160-FCT	160	160,0	161,5	14,6	16,2	127,6	132,3	6,450	20,197	✓
P-160200-FCT	200	200,0	201,8	18,2	20,2	159,6	165,4	9,950	31,436	✓
P-160250-FCT	250	250,0	252,3	22,7	25,1	199,8	206,9	15,500	49,121	✓

[12] Water max. weight calculated with ρ_{H_2O} at 4ºC.

PP-RCT 125 PIPE WITH FIBERGLASS SDR 17 ROMAKLIMA CT

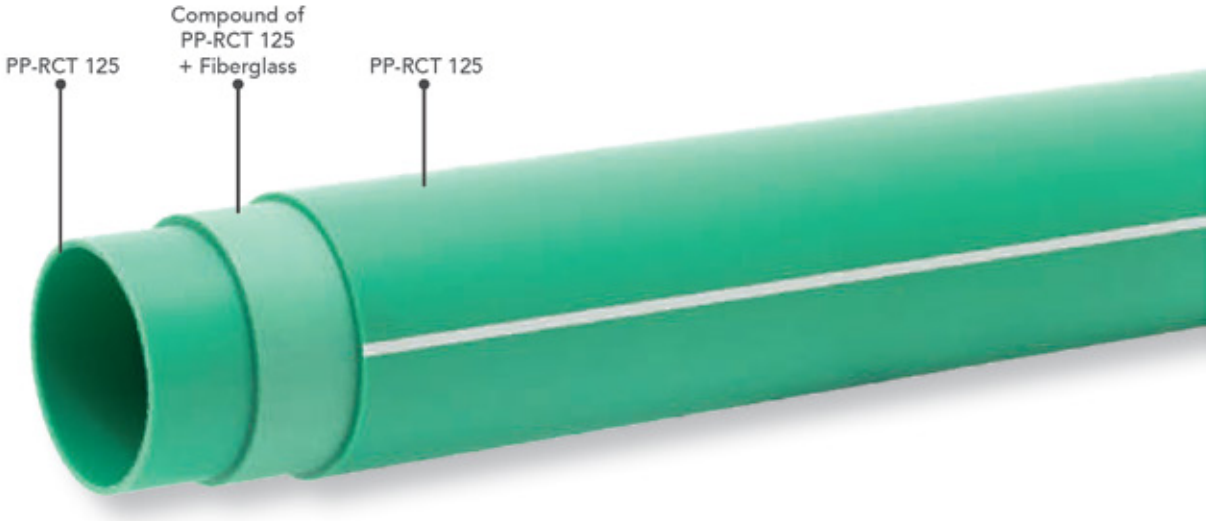

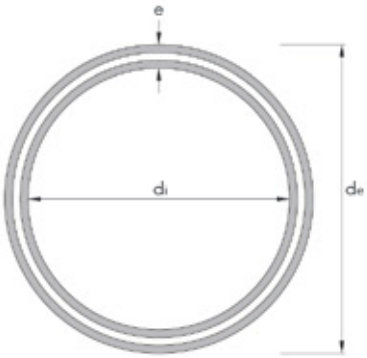

CHARACTERISTICS

SUPPLIED IN	ø 125 mm - 4 m bars | ø 160-400 mm - 5,8 m bars
TYPE OF WELDING	Socket | Electrofusion | Butt Welding
SERIES	8.0
STANDARDS	EN ISO 15874 | DIN 8077 | DIN 8078 DIN 16962 | ASTM F 2389 | RP 001.78

REF	d_n NOMINAL DIAMETER	d_e OUTSIDE DIAMETER		e THICKNESS		d_i INSIDE DIAMETER		WEIGHT	MAX WEIGHT W/ WATER [12]	COLOUR
		Min.	Max.	Min.	Max.	Min.	Max.			
	(mm)							(kg/m)		
P-140125-FRCT	125	125,0	126,2	7,4	8,3	108,4	111,4	2,750	12,497	✓
P-140160-FRCT	160	160,0	161,5	9,5	10,6	138,8	142,5	4,390	20,338	✓
P-140200-FRCT	200	200,0	201,8	11,9	13,2	173,6	178,0	6,853	31,738	✓
P-140250-FRCT	250	250,0	252,3	14,8	16,4	217,2	222,7	10,900	49,852	✓
P-140315-FRCT	315	315,0	317,5	18,7	20,7	273,6	280,1	16,750	78,369	✓
P-140355-FRCT	355	355,0	358,2	21,1	23,4	308,2	316,0	21,520	99,947	✓
P-140400-FRCT	400	400,0	403,6	23,7	26,2	347,6	356,2	27,300	126,950	✓

[12] Water max. weight calculated with ρ_{H_2O} at 4°C.

PP-RCT 125 PIPE WITH FIBERGLASS SDR 9 ROMAFASER CT +

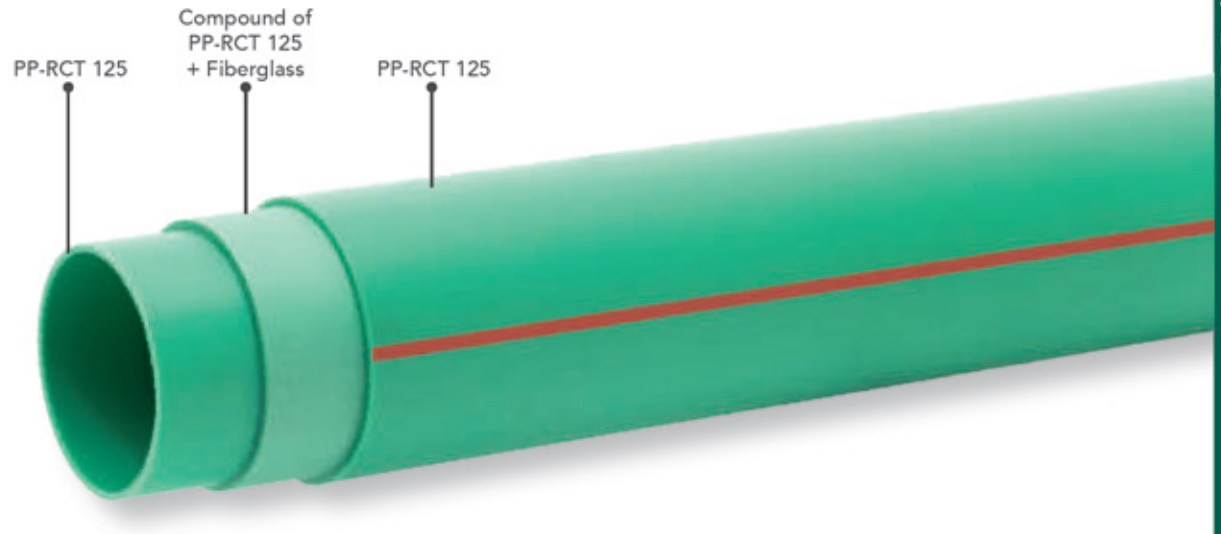

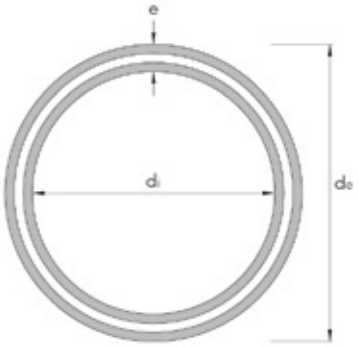

CHARACTERISTICS

SUPPLIED IN	ø 20-125 mm - 4 m bars | ø 160-250 mm - 5,8 m bars
TYPE OF WELDING	Socket | Electrofusion | Butt Welding
SERIES	4.0
STANDARDS	EN ISO 15874 | DIN 8077 | DIN 8078 DIN 16962 | ASTM F 2389 | RP 001.78

REF	d_n NOMINAL DIAMETER	d_e OUTSIDE DIAMETER		e THICKNESS		d_i INSIDE DIAMETER		WEIGHT	MAX WEIGHT W/ WATER [12]	COLOUR
		Min.	Max.	Min.	Max.	Min.	Max.			
	(mm)							(kg/m)		
P-16532-FCT	32	32,0	32,3	3,6	4,1	23,8	25,1	0,313	0,808	✓
P-16540-FCT	40	40,0	40,4	4,5	5,1	29,8	31,4	0,487	1,261	✓
P-16550-FCT	50	50,0	50,5	5,6	6,3	37,4	39,3	0,755	1,968	✓
P-16563-FCT	63	63,0	63,6	7,1	8	47	49,4	1,2	3,117	✓
P-16575-FCT	75	75,0	75,7	8,4	9,4	56,2	58,9	1,69	4,415	✓
P-16590-FCT	90	90,0	90,9	10,1	11,3	67,4	70,7	2,44	6,366	✓
P-165110-FCT	110	110,0	111	12,3	13,7	82,6	86,4	3,62	9,483	✓
P-165125-FCT[1]	125	125,0	126,2	14	15,5	94	98,2	4,66	12,234	✓
P-165160-FCT[1]	160	160,0	161,5	17,9	19,8	120,4	125,7	7,62	20,03	✓
P-165200-FCT[1]	200	200,0	201,8	22,4	24,8	150,4	157	11,9	31,259	✓
P-165250-FCT[1]	250	250,0	252,3	27,9	30,8	188,4	196,5	18,5	48,826	✓

[1] Limited to existing stock | [12] Water max. weight calculated with ρ_{H_2O} at 4ºC.

PP-R | PRODUCT RANGE

- PP-R PIPES
- PP-R FITTINGS
- ELECTROFUSION FITTINGS
- FITTINGS FOR ELECTROFUSION
- PP-R TOOLS

Heliroma

ELBOW 45°

CHARACTERISTICS

COLOUR	Green | Blue
RAW MATERIAL	PP-R 100 | PP-RCT 125
TYPE OF WELDING	Socket
STANDARDS	EN ISO 15874 | DIN 16962
COMPATIBLE SYSTEMS	HELISYSTEM | ROMAFASER | ROMAFASER ANTI-UV ROMAKLIMA | ROMAFASER CT | ROMAKLIMA CT

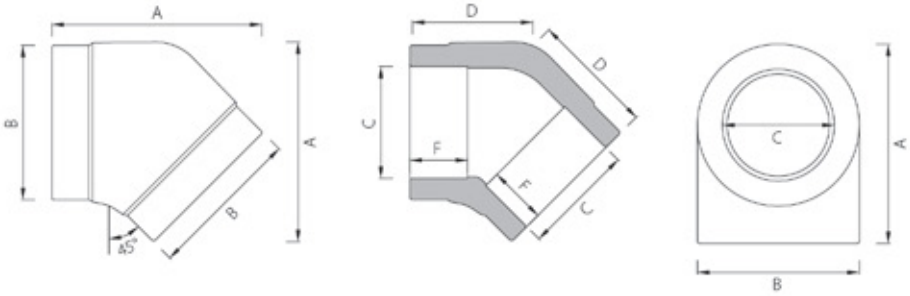

REF	Ø	A	B	C min	D	F				COLOUR	
	(mm)						(kg)	(un)			
P-CT202020	20	48	27	19,2	26	15	0,013	50	400	✓	✓
P-CT202025	25	55	35	24,2	29	16	0,019	25	250	✓	✓
P-CT202032	32	67	42	31,1	36	18	0,036	10	120	✓	✓
P-202040	40	70	52	39	40	21	0,057	5	80	✓	✓
P-202050	50	85	65	48,9	44	24	0,092	4	40	✓	✓
P-202063	63	97	82	61,9	53	28	0,172	2	20	✓	✓
P-202075	75	130	101	73,7	68	31	0,328	2	12	✓	✓
P-202090	90	150	122	88,6	79	37	0,529	1	6	✓	✓
P-2020110	110	179	144	108,4	92	42	0,841	1	4	✓	✓
P-2020125	125	209	162	122,4	110	40	1,380	1	2	✓	

ELBOW 45° XL

CHARACTERISTICS

COLOUR	Green
RAW MATERIAL	PP-R 100 | PP-RCT 125
TYPE OF WELDING	Butt Welding | Electrofusion
STANDARDS	EN ISO 15874 | DIN 16962
COMPATIBLE SYSTEMS	ROMAFASER | ROMAKLIMA | ROMAFASER CT ROMAKLIMA CT

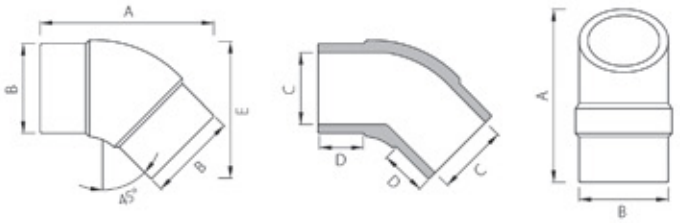

MODEL A

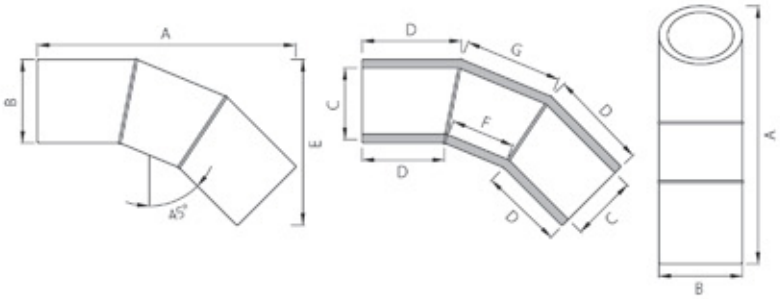

MODEL B

REF	Ø	A	B min	C	D	E	F	G	MODEL	SDR				COLOUR
	(mm)										(kg)	(un)		
P-2020160[3]	160	218	160	115,2	120	232	-	-	A	7,4	1,748	1	2	✓
CT2020200	200	425	200	163	151	240	-	-	A	11	4,100	1	1	✓
CT2020250	250	475	250	200	132	275	-	-	A	11	7,380	1	1	✓
CT2020315	315	550	315	255	152	285	-	-	A	11	13,000	1	1	✓
CT2020355[4]	355	1100	355	[13]	349	706	272	413	B	11	[13]	1	1	✓
CT2020400[4]	400	1250	400	[13]	400	800	306	465	B	11	[13]	1	1	✓

[3] Not suitable for electrofusion. | [4] Segmented fittings SDR 17. | [13] Value adjusted according to selected pipe.

ELBOW 90°

CHARACTERISTICS

COLOUR	Green | Blue
RAW MATERIAL	PP-R 100 | PP-RCT 125
TYPE OF WELDING	Socket
STANDARDS	EN ISO 15874 | DIN 16962
COMPATIBLE SYSTEMS	HELISYSTEM | ROMAFASER | ROMAFASER ANTI-UV ROMAKLIMA | ROMAFASER CT | ROMAKLIMA CT

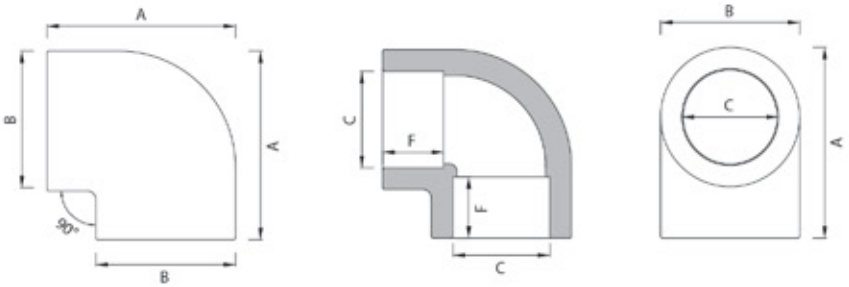

REF	Ø	A	B	C min	F				COLOUR	
	(mm)					(kg)	(un)			
P-CT206020	20	39,1	27,2	19,2	15	0,014	40	320	✓	✓
P-CT206025	25	44,9	32,8	24,2	16	0,023	20	200	✓	✓
P-CT206032	32	57,3	42,6	31,1	18	0,044	10	100	✓	✓
P-206040	40	68,0	53,0	39,0	21	0,075	5	50	✓	✓
P-206050	50	84,0	68,0	48,9	24	0,131	4	32	✓	✓
P-206063	63	104,0	85,0	61,9	28	0,271	2	16	✓	✓
P-206075	75	120,0	100,0	73,7	30	0,432	1	11	✓	✓
P-206090	90	145,0	121,0	88,6	33	0,732	1	6	✓	✓
P-2060110	110	168,0	131,0	108,4	37	1,143	1	4	✓	✓
P-2060125	125	191,0	155,0	122,4	40	1,734	1	2	✓	

ELBOW 90° XL

CHARACTERISTICS

COLOUR	Green
RAW MATERIAL	PP-R 100 | PP-RCT 125
TYPE OF WELDING	Butt Welding | Electrofusion
STANDARDS	EN ISO 15874 | DIN 16962
COMPATIBLE SYSTEMS	ROMAFASER | ROMAKLIMA | ROMAFASER CT ROMAKLIMA CT

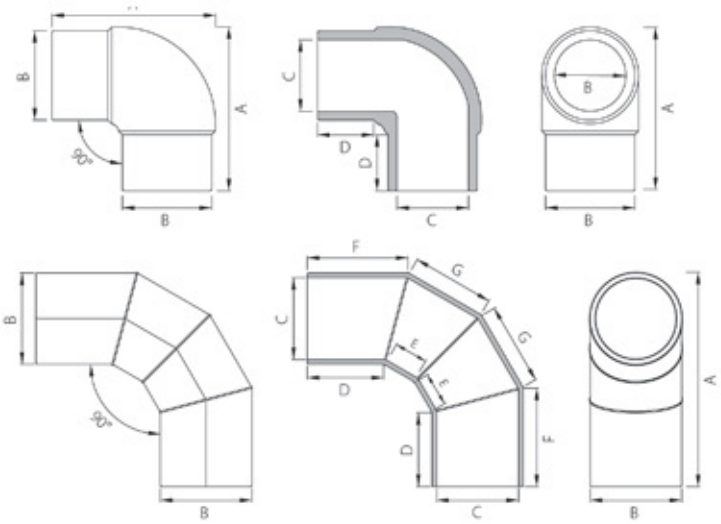

MODEL A

MODEL B

REF	Ø	A	B min	C	D	E	F	G	MODEL	SDR				COLOUR
	(mm)										(kg)	(un)		
P-2060160[3]	160	223	160	116,2	39	-	-	-	A	7,4	2,567	1	2	✓
CT2060200	200	354	200	162,0	151	-	-	-	A	11	5,020	1	1	✓
CT2060250	250	418	250	202,0	156	-	-	-	A	11	9,600	1	1	✓
CT2060315	315	522	315	255,0	202	-	-	-	A	11	18,900	1	1	✓
CT2060315	315	930	315	[13]	300	241	363	434	B	11	[13]	1	1	✓
CT2060355[4]	355	1060	355	[13]	350	272	421	489	B	11	[13]	1	1	✓
CT2060400[4]	400	1200	400	[13]	400	306	480	551	B	11	[13]	1	1	✓

[3] Not suitable for electrofusion. | [4] Segmented fittings SDR 17. | [13] Value adjusted according to selected pipe.

FEMALE ELBOW

CHARACTERISTICS

COLOUR	Green | Blue
RAW MATERIAL	PP-RCT 125 | Brass CW617N
TYPE OF WELDING	Socket
STANDARDS	EN ISO 15874 | DIN 16962
COMPATIBLE SYSTEMS	HELISYSTEM | ROMAFASER | ROMAFASER ANTI-UV ROMAKLIMA | ROMAFASER CT

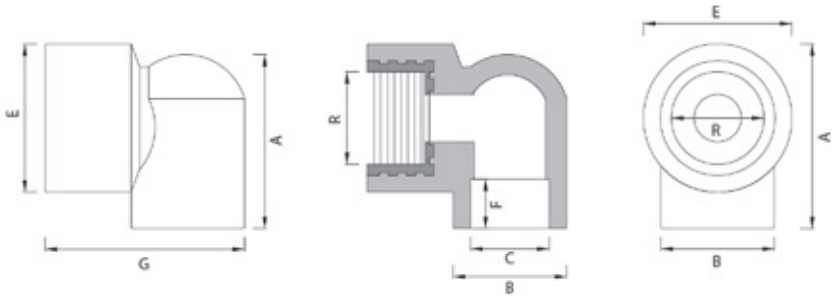

REF	Ø	A	B	C max	E	F	G	R				COLOUR	
	(mm x in)	(mm)						(in)	(kg)	(un)			
P-CT208020	20x1/2"	45	27	19,5	35	15	45	1/2"	0,045	20	200	✓	✓
P-CT208026	25x1/2"	45	33	24,5	35	16	47	1/2"	0,049	10	100	✓	✓
P-CT208025	25x3/4"	52	33	24,5	41	16	49	3/4"	0,059	10	100	✓	✓
P-CT208033	32x3/4"	57	41	31,5	42	18	60	3/4"	0,076	5	50	✓	✓
P-CT208032	32x1"	60	41	31,5	52	18	63	1"	0,111	5	50	✓	✓

MALE ELBOW

CHARACTERISTICS

COLOUR	Green | Blue
RAW MATERIAL	PP-RCT 125 | Brass CW617N
TYPE OF WELDING	Socket
STANDARDS	EN ISO 15874 | DIN 16962
COMPATIBLE SYSTEMS	HELISYSTEM | ROMAFASER | ROMAFASER ANTI-UV ROMAKLIMA | ROMAFASER CT

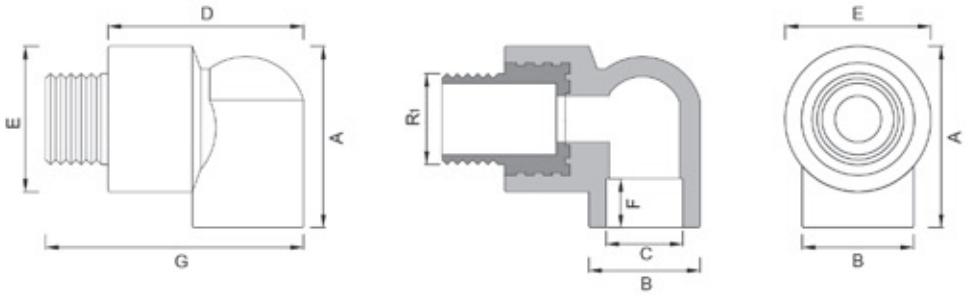

REF	Ø	A	B	C max	D	E	F	G	R_1				COLOUR	
	(mm x in)	(mm)							(in)	(kg)	(un)			
P-CT209020	20x1/2"	45	27	19,5	44	35	15	56	1/2"	0,054	20	140	✓	✓
P-CT209026	25x1/2"	45	33	24,5	47	35	16	59	1/2"	0,082	10	100	✓	✓
P-CT209025	25x3/4"	50	33	24,5	52	41	16	67	3/4"	0,046	10	100	✓	✓
P-CT209033	32x3/4"	57	42	31,5	60	42	18	74	3/4"	0,098	5	50	✓	✓
P-CT209032	32x1"	60	43	31,5	63	52	18	78	1"	0,129	5	50	✓	✓

LOOSE NUT ELBOW

CHARACTERISTICS

COLOUR	Green | Blue
RAW MATERIAL	PP-RCT 125 | Brass CW617N
TYPE OF WELDING	Socket
STANDARDS	EN ISO 15874 | DIN 16962
COMPATIBLE SYSTEMS	HELISYSTEM | ROMAFASER | ROMAFASER ANTI-UV ROMAKLIMA | ROMAFASER CT

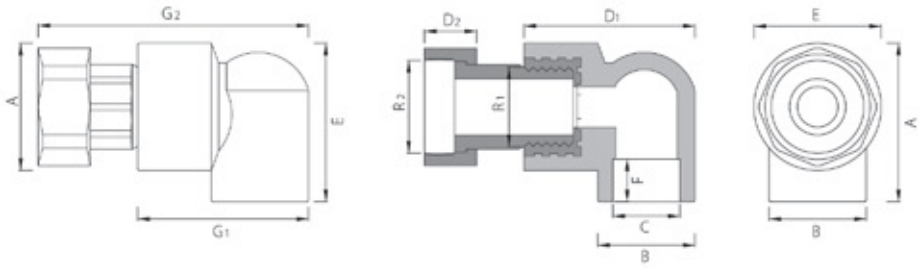

REF	Ø	A	B	C max	D_1	D_2	E	F	G_1	G_2	R_1	R_2				COLOUR	
	(mm x in)	(mm)									(in)		(kg)	(un)			
P-CT208020-L	20x3/4"	45	27	19,5	45	14	35	15	44	69	1/2"	3/4"	0,108	10	100	✓	✓
P-CT208026-L	25x3/4"	45	33	24,5	47	14	35	16	53	90	1/2"	3/4"	0,112	10	80	✓	✓
P-CT208025-L	25x1"	52	33	24,5	49	16	41	16	51	79	3/4"	1"	0,161	10	80	✓	✓
P-CT208033-L	32x1"	57	41	31,5	63	16	42	18	66	98	3/4"	1"	0,178	5	50	✓	✓
P-CT208032-L	32x1 1/4"	60	41	31,5	60	19	52	18	66	95	1"	1 1/4"	0,276	5	50	✓	✓

WALL PLATE FEMALE ELBOW

CHARACTERISTICS

COLOUR	Green | Blue
RAW MATERIAL	PP-R 100 | Brass CW617N
TYPE OF WELDING	Socket
STANDARDS	EN ISO 15874 | DIN 16962
COMPATIBLE SYSTEMS	HELISYSTEM | ROMAFASER | ROMAFASER ANTI-UV ROMAKLIMA | ROMAFASER CT

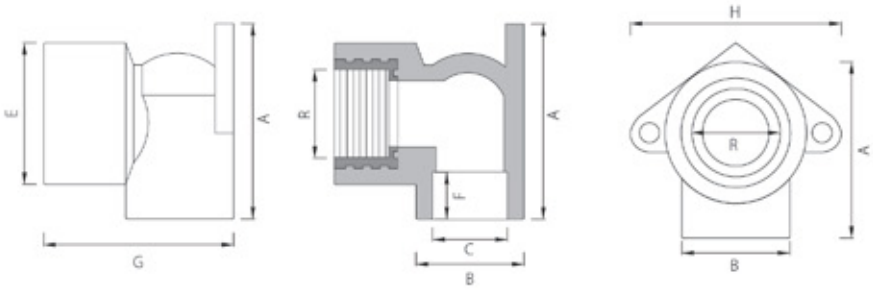

REF	Ø	A	B	C max	E	F	G	H	R				COLOUR	
	(mm x in)	(mm)							(in)	(kg)	(un)			
P-212020	20x1/2"	57	30	19,5	39	15	50	60	1/2"	0,060	10	100	✓	✓
P-212026	25x1/2"	52	35	24,5	45	16	55	66	1/2"	0,074	10	100	✓	✓
P-212025	25x3/4"	58	35	24,5	45	16	55	65	3/4"	0,074	10	100	✓	✓

TEE

CHARACTERISTICS

COLOUR	Green | Blue
RAW MATERIAL	PP-R 100 | PP-RCT 125
TYPE OF WELDING	Socket
STANDARDS	EN ISO 15874 | DIN 16962
COMPATIBLE SYSTEMS	HELISYSTEM | ROMAFASER | ROMAFASER ANTI-UV ROMAKLIMA | ROMAFASER CT | ROMAKLIMA CT

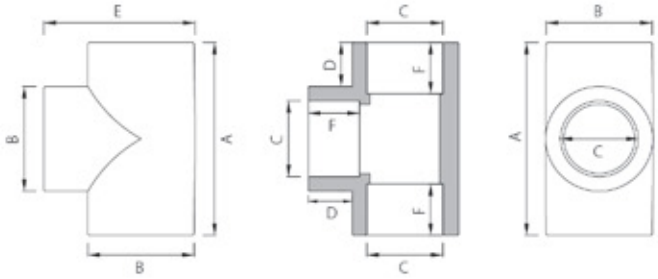

REF	Ø	A	B	C min	D	E	F				COLOUR	
	(mm)							(kg)	(un)			
P-CT230020	20	51	27	19,2	12	39	15	0,018	25	250	✓	✓
P-CT230025	25	60	33	24,2	14	46	16	0,028	15	150	✓	✓
P-CT230032	32	73	43	31,1	16	43	18	0,056	10	80	✓	✓
P-230040	40	83	53	39,0	18	76	21	0,100	5	50	✓	✓
P-230050	50	100	66	48,9	19	98	24	0,178	2	30	✓	✓
P-230063	63	124	85	61,9	19	103	28	0,351	2	12	✓	✓
P-230075	75	141	101	73,7	21	129	31	0,558	1	9	✓	✓
P-230090	90	165	120	88,6	23	145	37	0,882	1	6	✓	✓
P-2300110	110	201	140	108,4	28	169	42	1,534	1	4	✓	✓
P-2300125	125	223	163	122,4	30	180	40	2,202	1	2	✓	

TEE XL

CHARACTERISTICS

COLOUR	Green
RAW MATERIAL	PP-R 100 | PP-RCT 125
TYPE OF WELDING	Butt welding | Electrofusion
STANDARDS	EN ISO 15874 | DIN 16962
COMPATIBLE SYSTEMS	ROMAFASER | ROMAKLIMA | ROMAFASER CT ROMAKLIMA CT

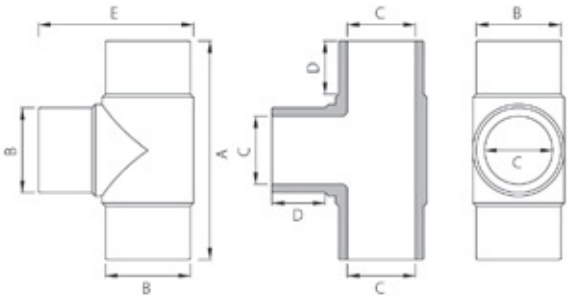

MODEL A

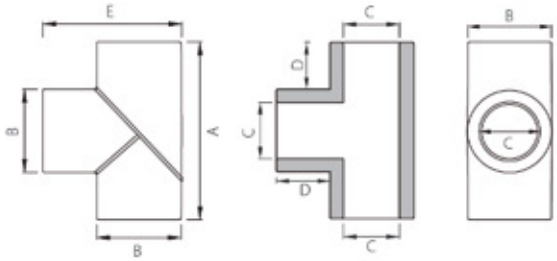

MODEL B

REF	Ø	A	B min	C	D	E	MODEL	SDR				COLOUR
	(mm)								(kg)	(un)		
P-2300160[3]	160	296	160	116,8	39	235	A	7,4	3,287	1	1	✓
CT2300200	200	500	200	159,7	120	348	A	11	7,546	1	1	✓
CT2300250	250	573	250	214	131	410	A	11	12,480	1	1	✓
CT2300315	315	945	315	277	295	624	B	11	20,700	1	1	✓
CT2300355[4]	355	948	355	307	309	656	B	11	25,800	1	1	✓
CT2300400[4]	400	1145	400	349	324	740	B	11	36,520	1	1	✓

[3] Not suitable for electrofusion. | [4] Segmented fittings SDR 17.

REDUCED TEE

CHARACTERISTICS

COLOUR	Green | Blue
RAW MATERIAL	PP-R 100 | PP-RCT 125
TYPE OF WELDING	Socket
STANDARDS	EN ISO 15874 | DIN 16962
COMPATIBLE SYSTEMS	HELISYSTEM | ROMAFASER | ROMAFASER ANTI-UV ROMAKLIMA | ROMAFASER CT | ROMAKLIMA CT

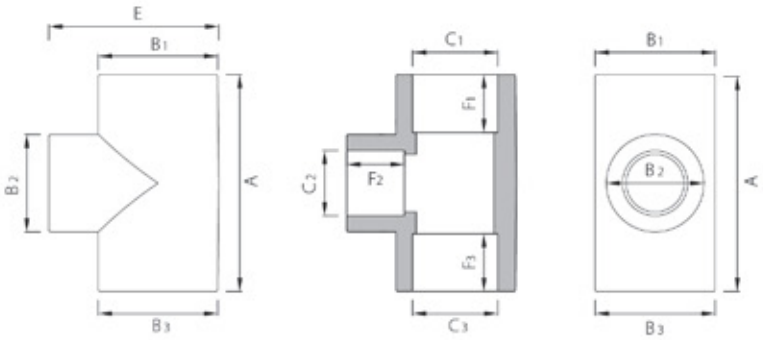

REF	Ø	A	B_1	B_2	B_3	C_1	C_2	C_3	F_1	F_2	F_3	E				COLOUR	
						(mm)							(kg)	(un)			
P-CT231020	25x20x20	53	33	24	14	27	19	12	16	15	15	44	0,022	20	140	✓	✓
P-CT231025	25x20x25	54	33	24	14	27	19	12	16	16	15	45	0,025	20	140	✓	✓
P-CT231023	25x25x20	56	33	24	13	33	24	14	16	15	16	46	0,024	20	140	✓	✓
P-231032	32x20x32	60	43	31	15	29	19	11	18	15	18	55	0,046	10	80	✓	✓
P-231035	32x25x25	64	42	31	15	35	24	12	18	16	18	54	0,045	10	80	✓	✓
P-CT231033	32x25x32	64	42	31	15	34	24	12	18	16	16	54	0,047	10	80	✓	✓
P-231041	40x20x40	61	54	39	16	29	19	10	21	15	21	64	0,063	5	50	✓	✓
P-231042	40x25x40	65	54	39	15	34	24	10	21	16	21	64	0,070	5	50	✓	✓
P-231043	40x32x40	77	54	39	17	43	31	13	21	18	21	67	0,086	5	50	✓	✓
P-231052	50x25x50	70	67	49	18	34	24	10	24	16	24	76	0,109	4	32	✓	✓
P-231053	50x32x50	80	67	49	19	42	31	11	24	18	24	76	0,127	4	32	✓	✓

CONTINUED >

CONTINUED >

REF	Ø	A	B_1	B_2	B_3	C_1	C_2	C_3	F_1	F_2	F_3	E				COLOUR	
	(mm)												(kg)	(un)			
P-231054	50x40x50	91	67	49	19	54	39	14	24	21	24	81	0,147	4	32	✓	✓
P-231062	63x25x63	83	85	62	24	34	24	10	28	16	28	94	0,194	2	12	✓	✓
P-231063	63x32x63	92	85	62	25	43	31	10	28	18	28	94	0,220	2	12	✓	✓
P-231064	63x40x63	98	84	62	21	54	39	10	28	21	28	94	0,235	2	12	✓	✓
P-231065	63x50x63	111	85	62	23	67	49	15	28	24	28	111	0,291	2	12	✓	✓
P-231074	75x40x75	107	101	74	27	54	39	10	31	21	31	109	0,365	1	8	✓	✓
P-231075	75x50x75	117	101	74	25	67	49	12	31	24	31	111	0,403	1	8	✓	✓
P-231076	75x63x75	131	101	74	23	86	62	17	31	28	31	117	0,481	1	8	✓	✓
P-231097	90x75x90	155	120	89	27	102	74	18	37	31	37	138	0,763	1	4	✓	✓
P-2310110	110x90x110	182	144	108	31	121	89	23	42	37	42	166	1,218	1	2	✓	
P-2310125	125x110x125	222	163	122	30	162	108	30	40	42	40	193	2,317	1	1	✓	

REDUCED TEE XL

CHARACTERISTICS

COLOUR	Green
RAW MATERIAL	PP-RCT 125
TYPE OF WELDING	Butt welding | Electrofusion
STANDARDS	EN ISO 15874 | DIN 16962
COMPATIBLE SYSTEMS	ROMAFASER | ROMAKLIMA | ROMAFASER CT ROMAKLIMA CT

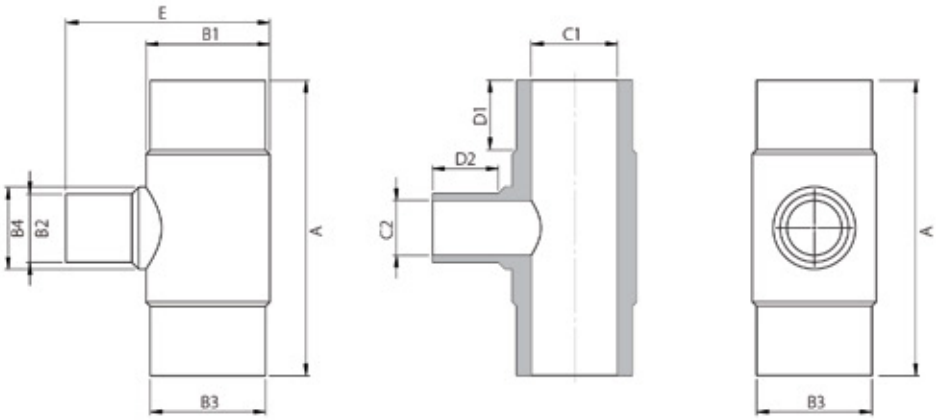

REF	Ø	A	B_1	B_2	B_3	B_4	C_1	C_2	D_1	D_2	E	SDR				COLOUR
		(mm)											(kg)	(un)		
CT2310162	160x90x160	-	-	-	-	-	-	-	-	-	-	11	-	1	1	✓
CT2310161	160x110x160	-	-	-	-	-	-	-	-	-	-	11	-	1	1	✓
CT2310160	160x125x160	-	-	-	-	-	-	-	-	-	-	11	-	1	1	✓
CT2310203	200x90x200	-	-	-	-	-	-	-	-	-	-	11	-	1	1	✓
CT2310202	200x110x200	-	-	-	-	-	-	-	-	-	-	11	-	1	1	✓
CT2310201	200x125x200	-	-	-	-	-	-	-	-	-	-	11	-	1	1	✓
CT2310200	200x160x200	-	-	-	-	-	-	-	-	-	-	11	-	1	1	✓

FEMALE TEE

CHARACTERISTICS

COLOUR	Green | Blue
RAW MATERIAL	PP-RCT 125 | Brass CW617N
TYPE OF WELDING	Socket
STANDARDS	EN ISO 15874 | DIN 16962
COMPATIBLE SYSTEMS	HELISYSTEM | ROMAFASER | ROMAFASER ANTI-UV ROMAKLIMA | ROMAFASER CT

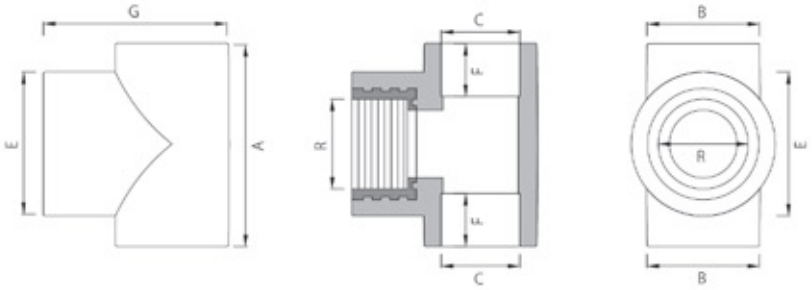

REF	Ø	A	B	C max	E	F	G	R				COLOUR	
	(mm x in)	(mm)						(in)	(kg)	(un)			
P-CT232020	20x1/2"	55	27	19,5	34	15	44	1/2"	0,049	20	160	✓	✓
P-CT232026	25x1/2"	57	33	24,5	35	16	47	1/2"	0,053	10	100	✓	✓
P-CT232025	25x3/4"	58	33	24,5	41	16	52	3/4"	0,065	10	100	✓	✓
P-CT232033	32x3/4"	69	42	31,5	42	18	60	3/4"	0,082	5	50	✓	✓
P-CT232032	32x1"	69	44	31,5	52	18	63	1"	0,112	5	50	✓	✓

MALE TEE

CHARACTERISTICS

COLOUR	Green | Blue
RAW MATERIAL	PP-RCT 125 | Brass CW617N
TYPE OF WELDING	Socket
STANDARDS	EN ISO 15874 | DIN 16962
COMPATIBLE SYSTEMS	HELISYSTEM | ROMAFASER | ROMAFASER ANTI-UV ROMAKLIMA | ROMAFASER CT

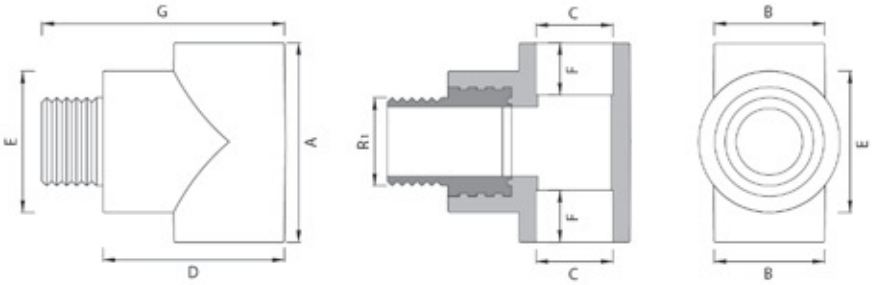

REF	Ø	A	B	C max	D	E	F	G	R_1				COLOUR	
	(mm x in)	(mm)							(in)	(kg)	(un)			
P-CT233020	20x1/2"	55	27	19,5	44	35	15	56	1/2"	0,058	10	100	✓	✓
P-CT233026	25x1/2"	57	33	24,5	47	35	16	59	1/2"	0,063	10	100	✓	✓
P-CT233025	25x3/4"	58	33	24,5	52	42	16	67	3/4"	0,086	10	100	✓	✓
P-CT233033	32x3/4"	69	42	31,5	60	42	16	59	3/4"	0,104	5	50	✓	✓
P-CT233032	32x1"	69	44	31,5	63	52	18	77	1"	0,132	5	50	✓	✓

SOCKET

CHARACTERISTICS

COLOUR	Green | Blue
RAW MATERIAL	PP-R 100 | PP-RCT 125
TYPE OF WELDING	Socket
STANDARDS	EN ISO 15874 | DIN 16962
COMPATIBLE SYSTEMS	HELISYSTEM | ROMAFASER | ROMAFASER ANTI-UV ROMAKLIMA | ROMAFASER CT | ROMAKLIMA CT

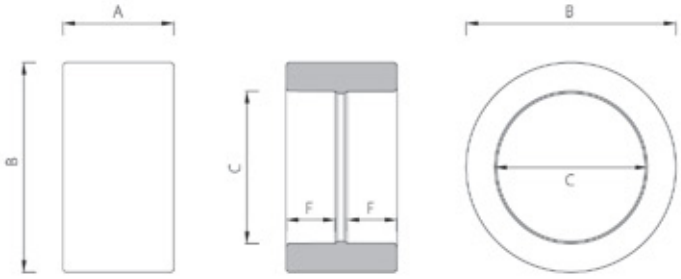

REF	Ø	A	B	C min	F				COLOUR	
			(mm)			(kg)	(un)			
P-CT200020	20	31	27	19,2	15	0,090	50	500	✓	✓
P-CT200025	25	34	33	24,2	16	0,014	40	320	✓	✓
P-CT200032	32	39	42	31,1	18	0,025	20	200	✓	✓
P-200040	40	43	54	39,0	21	0,046	10	100	✓	✓
P-200050	50	49	66	48,9	24	0,077	5	60	✓	✓
P-200063	63	58	85	61,9	28	0,142	4	32	✓	✓
P-200075	75	65	101	73,7	31	0,223	2	24	✓	✓
P-200090	90	75	120	88,6	37	0,350	1	13	✓	✓
P-2000110	110	88	144	108,4	42	0,561	1	10	✓	✓
P-2000125	125	90	162	122,4	40	0,702	1	6	✓	

REDUCER UNION

CHARACTERISTICS

COLOUR	Green | Blue
RAW MATERIAL	PP-R 100 | PP-RCT 125
TYPE OF WELDING	≤ 125 - welding male/female
	> 125 - butt welding
STANDARDS	EN ISO 15874 | DIN 16962
COMPATIBLE SYSTEMS	HELISYSTEM | ROMAFASER | ROMAFASER ANTI-UV ROMAKLIMA | ROMAFASER CT | ROMAKLIMA CT

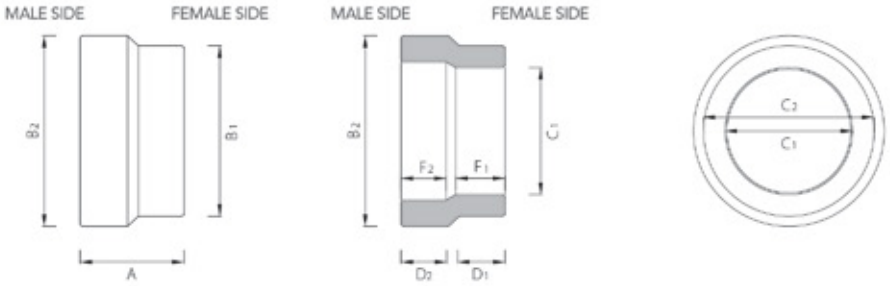

REF	Ø	A	MALE SIDE				FEMALE SIDE							COLOUR	
			B_2	C_2	D_2	F_2	B_1	C_1	D_1	F_1					
	(mm)										(kg)	(un)			
P-CT238025	25x20	34	25	17	16	19	27	19	16	15	0,011	50	500	✓	✓
P-CT238032	32x20	37	32	24	19	16	28	19	17	15	0,016	30	300	✓	✓
P-CT238033	32x25	34	32	24	21	18	32	24	13	16	0,014	30	300	✓	✓
P-238040	40x20	41	40	27	22	23	29	19	15	15	0,030	20	200	✓	✓
P-238041	40x25	43	40	29	20	20	34	24	17	16	0,028	20	200	✓	✓
P-238042	40x32	47	40	29	29	21	42	31	18	18	0,035	20	160	✓	✓
P-238051	50x20	45	50	37	23	18	28	19	15	15	0,035	10	100	✓	✓
P-238055	50x25	47	50	37	23	19	34	24	16	16	0,036	10	100	✓	✓
P-238052	50x32	54	51	36	24	26	42	32	20	18	0,051	10	100	✓	✓
P-238050	50x40	52	51	37	31	24	52	39	20	21	0,053	10	100	✓	✓

CONTINUED >

CONTINUED >

REF	Ø	A	MALE SIDE				FEMALE SIDE							COLOUR	
			B_2	C_2	D_2	F_2	B_1	C_1	D_1	F_1					
	(mm)										(kg)	(un)			
P-238062	63x25	53	64	44	22	23	34	24	19	16	0,058	5	60	✓	✓
P-238065	63x32	50	64	47	27	21	42	31	18	18	0,058	5	60	✓	✓
P-238063	63x40	48	64	47	25	20	53	39	18	21	0,059	5	60	✓	✓
P-238067	63x50	53	64	43	29	28	66	49	24	24	0,089	5	60	✓	✓
P-238075	75x50	60	76	55	31	24	66	49	24	24	0,107	4	40	✓	✓
P-238076	75x63	70	76	50	34	32	84	62	28	28	0,172	4	32	✓	✓
P-238096	90x63	66	91	65	35	27	83	62	28	28	0,171	2	16	✓	✓
P-238097	90x75	80	91	64	37	34	99	73	30	31	0,251	2	16	✓	✓
P-2380116	110x63	72	110	80	42	28	83	62	27	28	0,271	1	12	✓	✓
P-2380117	110x75	77	110	80	42	30	98	74	31	31	0,284	1	12	✓	✓
P-2380110	110x90	93	110	75	44	38	118	88	35	33	0,417	1	12	✓	✓
P-2380125	125x110	114	125	85	62	72	141	109	47	37	0,745	1	6	✓	
P-2380160	160x110	87	161	116	41	40	145	108	39	37	0,679	1	8	✓	
P-2380161	160x125	88	161	123	44	42	160	123	44	40	0,710	1	8	✓	

REDUCER UNION XL

CHARACTERISTICS

COLOUR	Green
RAW MATERIAL	PP-R 100 | PP-RCT 125
TYPE OF WELDING	Butt Welding | Electrofusion
STANDARDS	EN ISO 15874 | DIN 16962
COMPATIBLE SYSTEMS	ROMAFASER | ROMAKLIMA | ROMAFASER CT ROMAKLIMA CT

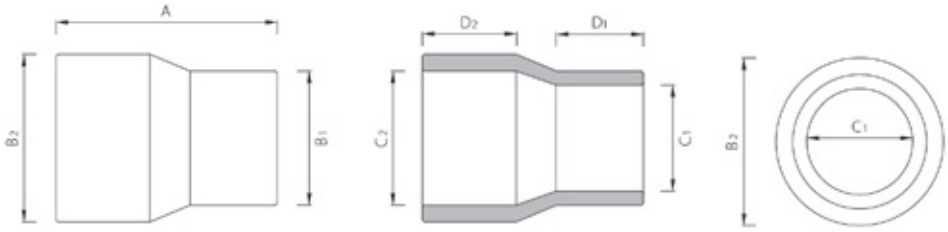

REF	Ø	A	B_1	B_2	C_1	C_2	D_1	D_2	SDR				COLOUR
	(mm)									(kg)	(un)		
P-2380160[3]	160x110	82	138	160	108,4	116	39,9	39,9	7,4	0,679	1	8	✓
P-2380161[3]	160x125	88	150,9	160	123,5	123,7	41	41,7	7,4	0,710	1	8	✓
CT2380200	200x160	280	160	200	130	162	120	126	11	2,280	1	1	✓
CT2380250	250x160	310	160	250	130	203	100	152	11	3,920	1	1	✓
CT2380251	250x200	320	200	250	160	201	115	150	11	4,520	1	1	✓
CT2380315	315x200	376	200	315	157	256	129	142	11	7,200	1	1	✓
CT2380316	315x250	344	250	315	200	256	118	142	11	7,220	1	1	✓
CT2380401[2]	400x315	-	-	-	-	-	-	-	11	-	1	1	✓
CT2381355	355x200	-	-	-	-	-	-	-	17	-	1	1	✓
CT2381356	355x250	-	-	-	-	-	-	-	17	-	1	1	✓
CT2381357	355x315	-	-	-	-	-	-	-	17	-	1	1	✓
CT2381401	400x315	-	-	-	-	-	-	-	17	-	1	1	✓
CT2381402	400x355	-	-	-	-	-	-	-	17	-	1	1	✓

[2] Limited to existing stock. | [3] Not suitable for electrofusion.

FEMALE ADAPTOR

CHARACTERISTICS

COLOUR	Green | Blue
RAW MATERIAL	PP-R 100 | PP-RCT 125 | Brass CW617N
TYPE OF WELDING	Socket
STANDARDS	EN ISO 15874 | DIN 16962
COMPATIBLE SYSTEMS	HELISYSTEM | ROMAFASER | ROMAFASER ANTI-UV ROMAKLIMA | ROMAFASER CT

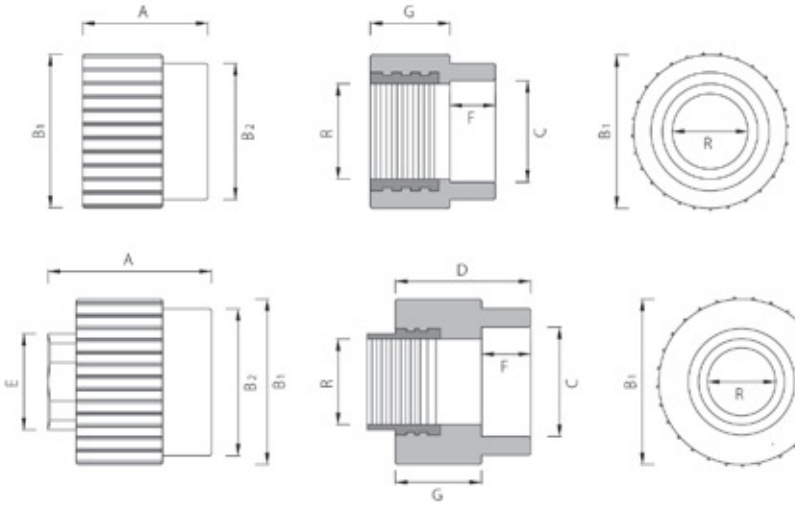

REF	Ø	A	B_1	B_2	C min	D	E	F	G	R	MODEL				COLOUR	
	(mm x in)	(mm)								(in)		(kg)	(un)			
P-CT234020	20x1/2"	35	33	27	19,2	-	-	15	21	1/2"	A	0,038	20	200	✓	✓
P-CT234026	25x1/2"	35	36	33	24,2	-	-	16	21	1/2"	A	0,041	10	150	✓	✓
P-CT234025	25x3/4"	39	40	33	24,2	-	-	16	21	3/4"	A	0,049	10	150	✓	✓
P-CT234033	32x3/4"	41	42	43	31,1	-	-	19	26	3/4"	A	0,054	10	100	✓	✓
P-CT234032	32x1"	47	53	43	31,1	-	-	19	26	1"	A	0,088	10	100	✓	✓
P-234040	40x1 1/4"	57	68	54	39,0	48	48	21	28	1 1/4"	B	0,251	5	50	✓	✓
P-234050	50x1 1/2"	62	80	66	48,9	53	54	24	32	1 1/2"	B	0,378	4	36	✓	✓
P-234063	63x2"	76	94	84	61,9	60	65	28	32	2"	B	0,569	2	20	✓	✓
P-234075	75x2 1/2"	85	114	100	73,7	63	81	31	32	2 1/2"	B	0,945	1	15	✓	✓
P-234090	90x3"	92	128	119	88,6	71	94	33	34	3"	B	1,241	1	12	✓	✓
P-2340110	110x4"	104	164	144	108,4	83	119	37	41	4"	B	2,011	1	6	✓	✓

MALE ADAPTOR

CHARACTERISTICS

COLOUR	Green | Blue
RAW MATERIAL	PP-R 100 | PP-RCT 125 | Brass CW617N
TYPE OF WELDING	Socket
STANDARDS	EN ISO 15874 | DIN 16962
COMPATIBLE SYSTEMS	HELISYSTEM | ROMAFASER | ROMAFASER ANTI-UV ROMAKLIMA | ROMAFASER CT

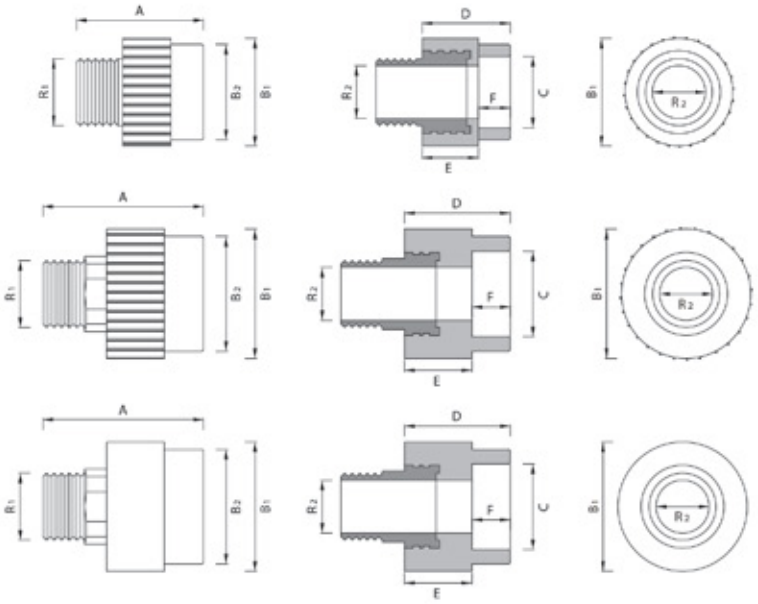

REF	Ø	A	B_1	B_2	C min	D	E	F	R_1	R_2	MODEL				COLOUR	
	(mm x in)	(mm)							(in)	(mm)		(kg)	(un)			
P-CT325020	20x1/2"	47	33	27	19,2	33	15	21	1/2"	16	A	0,047	20	200	✓	✓
P-CT325026	25x1/2"	48	36	33	24,2	34	16	21	1/2"	16	A	0,051	10	150	✓	✓
P-CT325025	25x3/4"	53	40	33	24,2	36	16	21	3/4"	20	A	0,071	10	150	✓	✓
P-CT325033	32x3/4"	55	42	43	31,1	39	18	26	3/4"	20	A	0,076	10	100	✓	✓
P-CT325032	32x1"	61	51	43	31,1	41	18	26	1"	26	A	0,108	10	100	✓	✓
P-325040	40x1 1/4"	77	68	54	39,0	48	21	28	1 1/4"	35	B	0,296	4	40	✓	✓
P-325050	50x1 1/2"	90	79	66	48,9	54	24	32	1 1/2"	40	B	0,537	4	32	✓	✓
P-325063	63x2"	98	95	84	61,9	60	28	32	2"	52	C	0,797	2	16	✓	✓
P-325075	75x2 1/2"	109	112	100	73,7	64	31	32	2 1/2"	66	C	1,208	1	12	✓	✓
P-325090	90x3"	121	127	119	88,6	67	37	34	3"	78	C	1,65	1	8	✓	✓
P-3250110	110x4"	137	166	144	108,4	78	42	41	4"	103	C	2,529	1	3	✓	✓

LOOSE NUT ADAPTOR

CHARACTERISTICS

COLOUR	Green | Blue
RAW MATERIAL	PP-R 100 | PP-RCT 125 | Brass CW617N
TYPE OF WELDING	Socket
STANDARDS	EN ISO 15874 | DIN 16962
COMPATIBLE SYSTEMS	HELISYSTEM | ROMAFASER | ROMAFASER ANTI-UV ROMAKLIMA | ROMAFASER CT

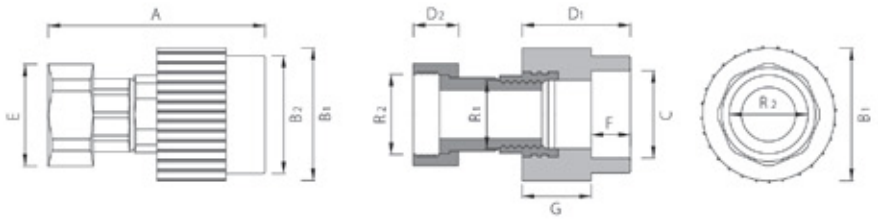

MODEL A

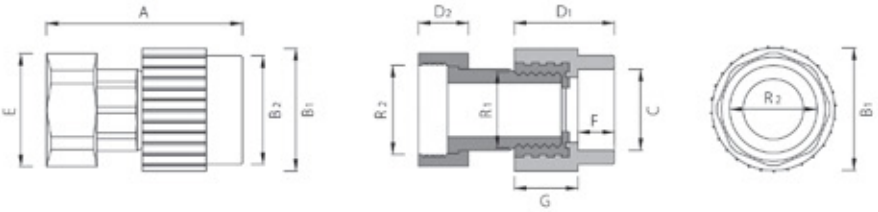

MODEL B

REF	Ø	A	B_1	B_2	C min	D_1	D_2	E	F	G	R_1	R_2	MODEL				COLOUR	
	(mm x in)	(mm)									(in)			(kg)	(un)			
P-CT234020-L	20x3/4"	67	33	27	19,2	35	13	32	15	21	1/2"	3/4"	A	0,113	10	100	✓	✓
P-CT234026-L	25x3/4"	67	36	33	24,2	35	13	32	16	21	1/2"	3/4"	A	0,115	10	100	✓	✓
P-CT234025-L	25x1"	72	40	33	24,2	39	16	41	16	21	3/4"	1"	A	0,211	10	100	✓	✓
P-CT234033-L	32x1"	81	53	43	31,1	47	16	51	19	26	3/4"	1"	A	0,210	5	60	✓	✓
P-CT234032-L	32x1 1/4"	81	42	43	31,1	41	17	51	19	26	1"	1 1/4"	A	0,389	5	60	✓	✓
P-234040-L	40X1 1/2"	94	68	54	39	57	18	58	21	28	1 1/4"	1 1/2"	B	0,253	3	30	✓	✓
P-234050-L	50x2"	107	80	66	48,9	62	22	71	24	32	1 1/2"	2"	B	1,013	2	24	✓	✓
P-234063-L	63x2 1/2"	123	94	84	61,9	76	26	89	28	32	2"	2 1/2"	B	1,241	1	12	✓	✓
P-234075-L	75x3"	135	114	100	73,7	85	28	101	31	32	2 1/2"	3"	B	2,456	1	9	✓	✓

BRASS FEMALE UNION

CHARACTERISTICS

COLOUR	Green | Blue
RAW MATERIAL	PP-R 100 | Brass CW617N
TYPE OF WELDING	Socket
STANDARDS	EN ISO 15874 | DIN 16962
COMPATIBLE SYSTEMS	HELISYSTEM | ROMAFASER | ROMAFASER ANTI-UV ROMAKLIMA |ROMAFASER CT

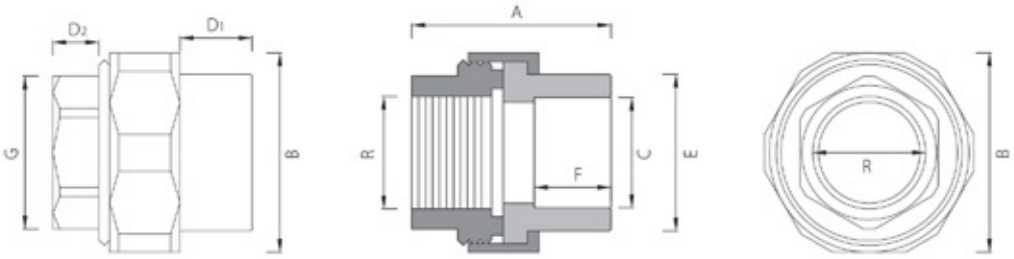

REF	Ø	A	B	C max	D_1	D_2	E	F	G	R				COLOUR	
	(mm x in)	(mm)								(in)	(kg)	(un)			
P-200020-DH	20x1/2"	39	39	19,5	15	10	28	15	24	1/2"	0,095	10	80	✓	✓
P-200025-DH	25x3/4"	41	50	24,5	16	10	33	16	30	3/4"	0,119	10	60	✓	✓
P-200032-DH	32x1"	45	65	31,5	18	11	43	18	37	1"	0,194	5	30	✓	✓
P-200040-DH	40x1 1/4"	50	63	39,4	21	12	51	21	34	1 1/4"	0,229	2	16	✓	✓
P-200050-DH	50x1 1/2"	57	80	49,4	25	12	66	24	52	1 1/2"	0,975	2	12	✓	✓
P-200063-DH[5]	63x2"	-	-	-	-	-	-	-	-	-	-	-	-	✓	✓

[5] Available soon.

BRASS MALE UNION

CHARACTERISTICS

COLOUR	Green | Blue
RAW MATERIAL	PP-R 100 | Brass CW617N
TYPE OF WELDING	Socket
STANDARDS	EN ISO 15874 | DIN 16962
COMPATIBLE SYSTEMS	HELISYSTEM | ROMAFASER | ROMAFASER ANTI-UV ROMAKLIMA | ROMAFASER CT

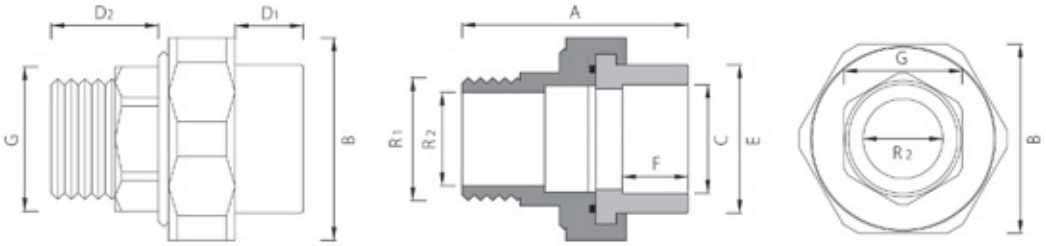

REF	Ø	A	B	C max	D_1	D_2	E	F	G	R				COLOUR	
	(mm x in)	(mm)								(in)	(kg)	(un)			
P-200020-DM	20x1/2"	50	39	19,5	15	21	28	15	22	1/2"	0,103	10	80	✓	✓
P-200025-DM	25x3/4"	51	45	24,5	16	21	33	16	37	3/4"	0,133	10	60	✓	✓
P-200032-DM	32x1"	58	55	31,5	18	23	43	18	34	1"	0,210	5	30	✓	✓
P-200040-DM	40x1 1/4"	62	63	39,4	20	23	51	21	42	1 1/4"	0,260	2	16	✓	✓
P-200050-DM	50x1 1/2"	71	80	49,4	24	25	66	24	31	1 1/2"	0,463	2	12	✓	✓
P-200063-DM[5]	63x2"	-	-	-	-	-	-	-	-	-	-	-	-	✓	✓

[5] Available soon.

UNIVERSAL UNION

CHARACTERISTICS

COLOUR	Green | Blue
RAW MATERIAL	PP-R 100 | Brass CW617N
TYPE OF WELDING	Socket
STANDARDS	EN ISO 15874 | DIN 16962
COMPATIBLE SYSTEMS	HELISYSTEM | ROMAFASER | ROMAFASER ANTI-UV ROMAKLIMA |ROMAFASER CT

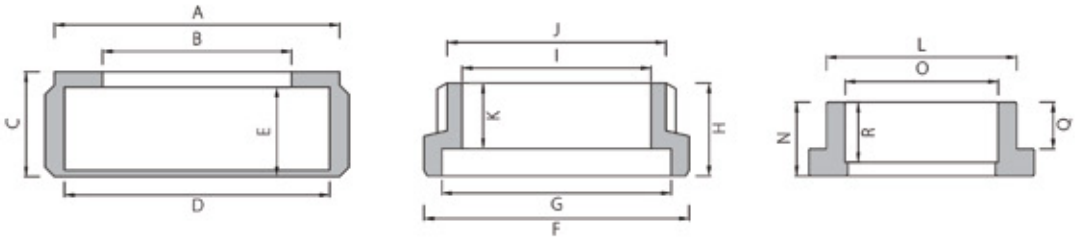

REF	Ø	A	B	C	D	E	F	G	H	I	J	K	L	N	O min	Q	R	(kg)	(un)	(un)	COLOUR	
	(mm)																					
P-200020-D	20	43,0	28,5	15,8	15	13,8	11	2,0	13,5	2,3	M40x1,5	34,6	28	21,5	19,2	16,6	14,6	0,113	10	100	✓	✓
P-200025-D	25	49,5	33,7	15,9	16	13,9	10,6	2,0	13,5	2,4	M46x1,5	39,8	33	23,2	24,2	18	16,1	0,145	10	70	✓	✓
P-200032-D	32	61,0	43,6	17	19	15	12	2,0	14,4	2,6	M57x2,0	50,4	43	25,9	31,1	21,2	18,5	0,234	5	35	✓	✓
P-200040-D	40	67,5	51,2	20,3	21	17,8	13,8	2,5	17,3	3,0	M63x2,0	56,5	51	29,5	39,0	22,9	20,5	0,307	2	24	✓	✓
P-200050-D	50	84,0	66,6	24,5	24	22	16,7	2,5	21,5	3,0	M80x2,0	73	66	35,5	48,9	27	23,8	0,519	2	12	✓	✓
P-200063-D	63	97,8	78,8	25,1	28	21,9	-	84,9	21	78,9	84,7	13,5	72	39,1	61,9	30,4	23,4	0,685	2	10	✓	✓

WELD-IN SADDLE

CHARACTERISTICS

COLOUR	Green
RAW MATERIAL	PP-R 100
TYPE OF WELDING	Socket
STANDARDS	EN ISO 15874 | DIN 16962
COMPATIBLE SYSTEMS	HELISYSTEM | ROMAFASER | ROMAFASER ANTI-UV ROMAKLIMA | ROMAFASER CT | ROMAKLIMA CT

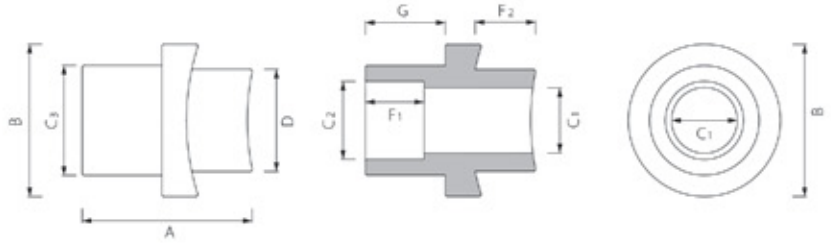

MODEL A

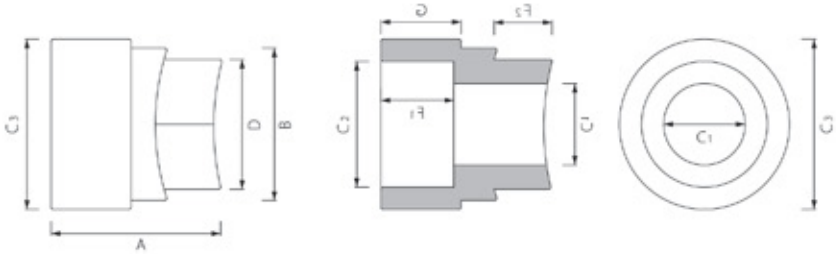

MODEL B

REF	Ø	A	B	C_1	C_2 min	C_3	D	F_1	F_2	G	MODEL				COLOUR	
	(mm)	(mm)										(kg)	(un)			
P-480063	63-75-90x20	38	38	16	19,2	27	25	15	10	22	A	0,018	50	400	✓	✓
P-480064	63-75-90x25	38	38	16	24,2	33	25	16	10	22	A	0,019	40	320	✓	✓
P-480065	63-75-90x32	46	38	20	31,1	42	32	18	11	28	B	0,032	20	200	✓	✓
P-480074	75-90-110x40	-	-	-	-	-	-	-	-	-	-	-	10	60	✓	✓
P-480095	90-110-125x50	-	-	-	-	-	-	-	-	-	-	-	10	60	✓	✓
P-480110	110-125-160x20	42	38	16	19,2	27	25	15	14	22	A	0,019	50	400	✓	✓
P-480111	110-125-160x25	42	38	16	24,2	33	25	16	14	22	B	0,020	40	320	✓	✓
P-480112	110-125-160x32	50	38	20	31,1	42	32	18	14	28	B	0,033	20	200	✓	✓
P-480116	110-125-160x63	-	-	-	-	-	-	-	-	-	-	-	6	36	✓	✓
P-480124	125-160-200x40	-	-	-	-	-	-	-	-	-	-	-	10	60	✓	
P-480126	125-160-200x75	-	-	-	-	-	-	-	-	-	-	-	5	20	✓	
P-480165	160-200-250x50	-	-	-	-	-	-	-	-	-	-	-	10	60	✓	
P-480206	200-250-315x63	-	-	-	-	-	-	-	-	-	-	-	6	36	✓	
P-480257	250-315-355x75	-	-	-	-	-	-	-	-	-	-	-	5	20	✓	

Note: see tools (derivation bush and derivation drill bit).

FEMALE WELD-IN SADDLE

CHARACTERISTICS

COLOUR	Green
RAW MATERIAL	PP-R 100 | Brass CW617N
TYPE OF WELDING	Socket
STANDARDS	EN ISO 15874 | DIN 16962
COMPATIBLE SYSTEMS	HELISYSTEM | ROMAFASER | ROMAFASER ANTI-UV ROMAKLIMA | ROMAFASER CT | ROMAKLIMA CT

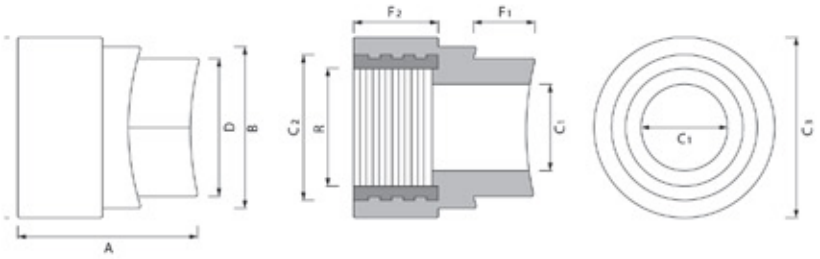

REF	Ø	A	B	C_1	C_2	C_3	D	F_1	F_2	R			COLOUR	
	(mm x in)	(mm)								(in)	(kg)	(un)		
P-490050	50x1/2"	-	-	-	-	-	-	-	-	-	-	20	200	✓	✓
P-490051	50x3/4"	-	-	-	-	-	-	-	-	-	-	20	200	✓	✓
P-490063	63-75-90x1/2"	46	38	20	27	42	32	10	28	1/2"	0,060	20	200	✓	✓
P-490064	63-75-90x3/4"	46	38	20	32	42	32	10	28	3/4"	0,061	20	200	✓	✓
P-490110	110-125-160x1/2"	50	38	20	27	42	32	15	28	1/2"	0,063	20	200	✓	✓
P-490111	110-125-160x3/4"	50	38	20	32	42	32	15	28	3/4"	0,062	20	200	✓	✓

Note: see tools (derivation bush and derivation drill bit).

MALE WELD-IN SADDLE

CHARACTERISTICS

COLOUR	Green
RAW MATERIAL	PP-R 100 | Brass CW617N
TYPE OF WELDING	Socket
STANDARDS	EN ISO 15874 | DIN 16962
COMPATIBLE SYSTEMS	HELISYSTEM | ROMAFASER | ROMAFASER ANTI-UV ROMAKLIMA | ROMAFASER CT | ROMAKLIMA CT

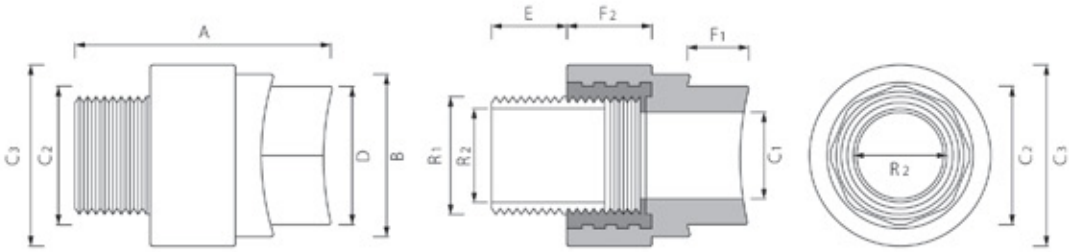

REF	Ø	A	B	C_1	C_2	C_3	D	E	F_1	F_2	R_1	R_2				COLOUR	
	(mm x in)	(mm)									(in)	(mm)	(kg)	(un)			
P-500063	63-75-90x1/2"	61	38	20	26	43	32	15	10	28	1/2"	16	0,071	20	160	✓	✓
P-500064	63-75-90x3/4"	63	38	20	26	43	32	17	10	28	3/4"	21	0,082	20	160	✓	✓
P-500110	110-125-160x1/2"	63	38	20	26	43	32	15	15	28	1/2"	16	0,073	20	160	✓	✓
P-500111	110-125-160x3/4"	65	38	20	26	43	32	17	15	28	3/4"	21	0,083	20	160	✓	✓

Note: see tools (derivation bush and derivation drill bit).

STOP VALVE

CHARACTERISTICS

COLOUR	Green | Blue
RAW MATERIAL	PP-R 100 | Brass CW617N
TYPE OF WELDING	Socket
STANDARDS	EN ISO 15874 | DIN 16962
COMPATIBLE SYSTEMS	HELISYSTEM | ROMAFASER | ROMAFASER ANTI-UV ROMAKLIMA | ROMAFASER CT

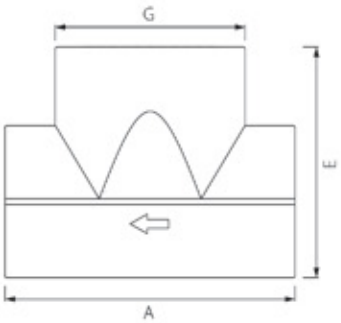

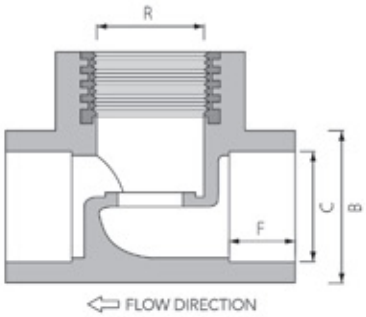

REF	Ø	A	B	C min	OVALIZATION	E	F	G	R				COLOUR	
	(mm x in)	(mm)							(in)	(kg)	(un)			
P-244020	20x1/2"	68	29	19,2	14,5	43	15	38	1/2"	0,069	10	100	✓	✓
P-244025	25x3/4"	77	47	24,2	16	46	16	45	3/4"	0,098	10	100	✓	✓
P-244032	32x1"	80	67	31,1	18	66	18	53	1"	0,160	10	50	✓	✓

WHEEL VALVE

CHARACTERISTICS

COLOUR	Green | Blue
BODY	PP-R 100
THREAD	Brass CW617N
HANDLE	PP-R 100
MECHANISM	Brass CW617N
TYPE OF WELDING	Socket
STANDARDS	EN ISO 15874 | DIN 16962
COMPATIBLE SYSTEMS	HELISYSTEM | ROMAFASER | ROMAFASER ANTI-UV ROMAKLIMA | ROMAFASER CT

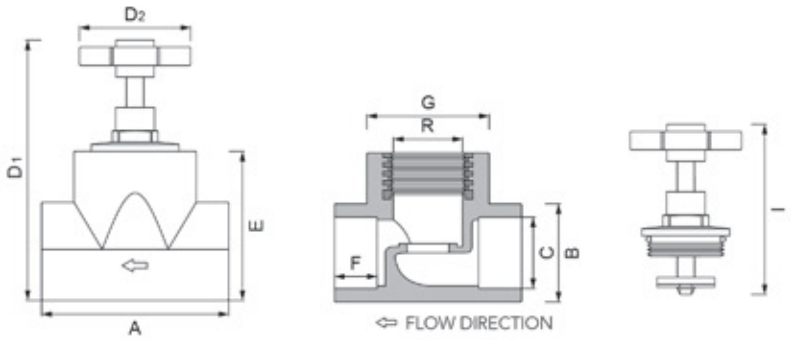

REF	Ø	A	B	C min	D_1	D_2	E	F	G	I	R				COLOUR	
	(mm)										(in)	(kg)	(un)			
P-244020-VLO	20	68	29	19,2	83	53	43	15	38	79	1/2"	0,148	5	50	✓	✓
P-244025-VLO	25	77	47	24,2	86	53	46	16	45	79	3/4"	0,192	5	50	✓	✓
P-244032-VLO	32	80	67	31,1	106	53	66	18	53	79	1"	0,283	3	30	✓	✓

HANDLE VALVE

CHARACTERISTICS

COLOUR	Green | Blue
BODY	PP-R 100
THREAD	Brass CW617N
HANDLE	Brass CW617N
HANDLE MECHANISM	Chrome-Plated Brass
MIRROR	Stainless Steel
TYPE OF WELDING	Socket
STANDARDS	EN ISO 15874 | DIN 16962
COMPATIBLE SYSTEMS	HELISYSTEM | ROMAFASER | ROMAFASER ANTI-UV ROMAKLIMA | ROMAFASER CT

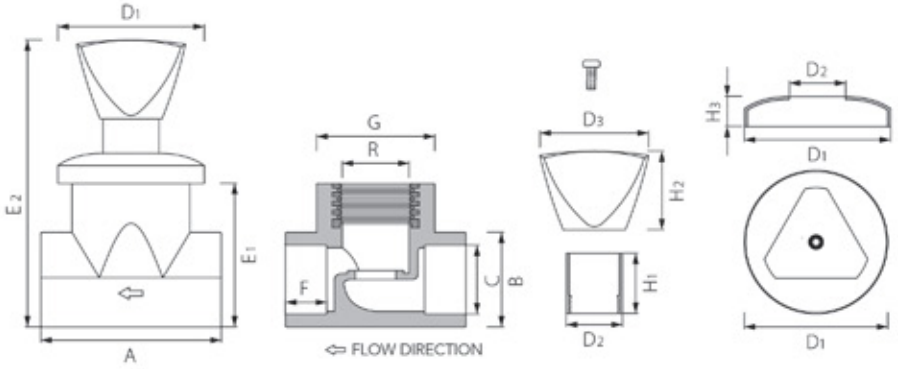

REF	Ø	A	B	C min	D_1	D_2	D_3	E_1	E_2	F	G	H_1	H_2	H_3	R	I				COLOUR	
		(mm)													(in)	(mm)	(kg)	(un)			
P-244020-CP	20	68	29	19,2	64	24	47	43	103	15	38	27	35	13	1/2''	80-100	0,245	5	50	✓	✓
P-244025-CP	25	77	47	24,2	64	24	47	46	106	16	45	27	35	13	3/4''	80-100	0,306	5	50	✓	✓
P-244032-CP	32	80	67	31,1	64	24	47	66	126	18	53	27	35	13	1''	80-100	0,487	3	30	✓	✓

CONCEALED VALVE

CHARACTERISTICS

COLOUR	Green | Blue
BODY	PP-R 100
THREAD	Brass CW617N
HANDLE	Brass CW617N
HANDLE MECHANISM	Chrome-Plated Brass
MIRROR	Stainless Steel
TYPE OF WELDING	Socket
STANDARDS	EN ISO 15874 | DIN 16962
COMPATIBLE SYSTEMS	HELISYSTEM | ROMAFASER | ROMAFASER ANTI-UV ROMAKLIMA | ROMAFASER CT

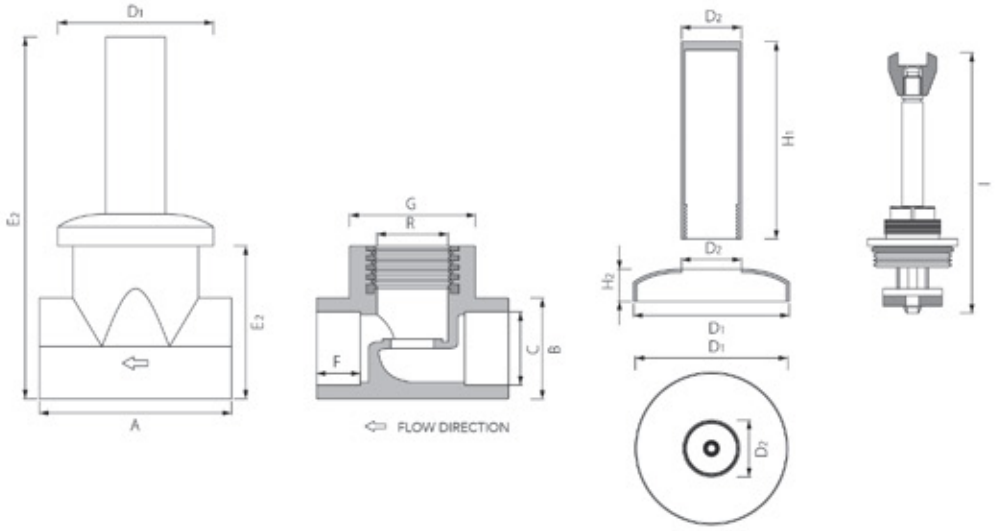

REF	Ø	A	B	C min	D_1	D_2	E	E_1	F	G	H_1	H_2	I	R				COLOUR	
	(mm)													(in)	(kg)	(un)			
P-244020-RO	20	68	29	19,2	64	24	43	89	15	38	41	12	60-70	1/2''	0,186	5	50	✓	✓
P-244025-RO	25	77	47	24,2	64	24	46	92	16	45	41	12	60-70	3/4''	0,245	5	50	✓	✓
P-244032-RO	32	80	67	31,1	64	24	66	112	18	53	41	12	60-70	1''	0,319	3	30	✓	✓

BALL VALVE

CHARACTERISTICS

COLOUR	Green | Blue
BODY	PP-R 100
SEAL	PTFE
BALL	Chrome-Plated Brass
HANDLE PLUG	MDPE
PRESSURE CLASS	PN 25 (DN20 - DN75) | PN 10 (DN90 - DN125)
TYPE OF WELDING	Socket
STANDARDS	EN ISO 15874 | DIN 16962
COMPATIBLE SYSTEMS	HELISYSTEM | ROMAFASER | ROMAFASER ANTI-UV ROMAKLIMA | ROMAFASER CT | ROMAKLIMA CT

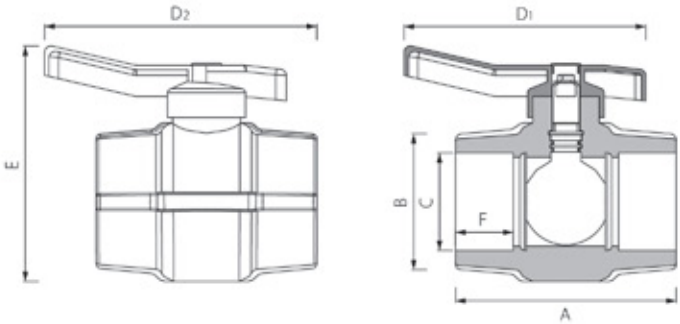

REF	Ø	A	B	C min	D_1	D_2	E	F				COLOUR	
	(mm)								(kg)	(un)			
244020-EI	20	74	30	19,2	85	90	75	15	0,126	5	80	✓	✓
244025-EI	25	78	36	24,2	85	100	75	16	0,133	5	50	✓	✓
244032-EI	32	89	45	31,1	108	115	85	18	0,208	5	30	✓	✓
244040-EI	40	98	56	39,0	108	120	105	21	0,362	4	20	✓	✓
244050-EI	50	112	71	48,9	108	125	120	24	0,524	2	16	✓	✓
244063-EI	63	132	90	61,9	150	160	145	28	0,979	1	9	✓	✓
244075-EI	75	151	103	73,7	186	175	170	31	1,421	1	6	✓	
244090-EI	90	189	108	88,6	186	340	215	37	2,376	1	4	✓	
2440110-EI	110	214	130	108,4	186	350	220	42	3,560	1	2	✓	
2440125-EI	125	240	160	122,4	186	365	240	40	4,320	1	1	✓	

PP-R DEMOUNTABLE VALVE

CHARACTERISTICS

COLOUR	Green
BODY	PP-R 100
SEAL	EPDM
BALL	Chrome-Plated Brass
HANDLE PLUG	PE
PRESSURE CLASS	-
TYPE OF WELDING	Socket
STANDARDS	EN ISO 15874 | DIN 16962
COMPATIBLE SYSTEMS	HELISYSTEM | ROMAFASER | ROMAFASER ANTI-UV ROMAKLIMA | ROMAFASER CT | ROMAKLIMA CT

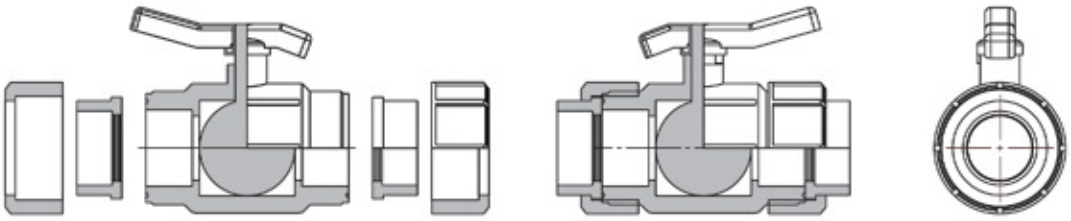

REF	Ø				COLOUR
	(mm)	(kg)	(un)		
244020-XP	20	0,133	5	50	✓
244025-XP	25	0,208	5	30	✓
244032-XP	32	0,362	3	24	✓
244040-XP	40	0,524	2	16	✓
244050-XP	50	0,979	1	8	✓
244063-XP	63	1,421	1	4	✓
244075-XP	75	2,376	1	2	✓
244090-XP	90	3,560	1	1	✓
2440110-XP	110	4,320	1	7	✓

DEMOUNTABLE VALVE

CHARACTERISTICS

COLOUR	Green | Blue
BODY	PP-R 100
NUT	Brass CW617N
INSERT	PP-R 100
HANDLE	MDPE
TYPE OF WELDING	Socket
STANDARDS	EN ISO 15874 | DIN 16962
COMPATIBLE SYSTEMS	HELISYSTEM | ROMAFASER | ROMAFASER ANTI-UV ROMAKLIMA | ROMAFASER CT

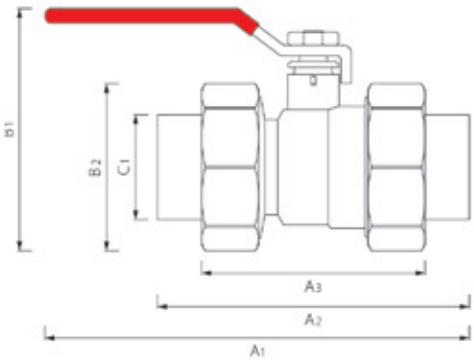

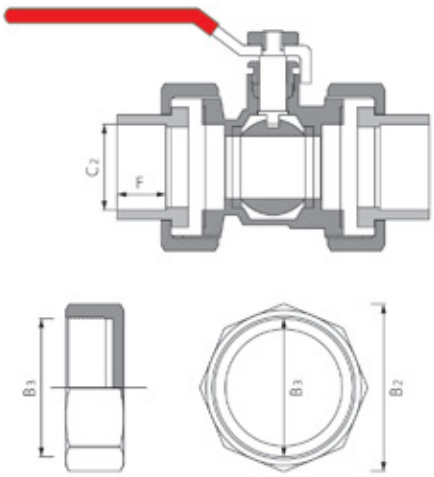

REF	Ø	A_1	A_2	A_3	B_1	B_2	B_3	C_1	C_2	F				COLOUR	
	(mm)										(kg)	(un)			
P-244020-X	20	127	95	67	65	43	36	28	19	16	0,34	5	70	✓	✓
P-244025-X	25	142	96	68	72	49	42	33	24	17	0,465	5	50	✓	✓
P-244032-X	32	167	104	70	92	61	52	43	31	18	0,712	5	30	✓	✓
P-244040-X	40	192	121	82	111	73	68	50	39	20	1,116	2	20	✓	✓
P-244050-X	50	215	143	97	130	92	85	66	49	23	1,814	2	8	✓	✓

HANDLE VALVE KIT EXTENDER

COMPOSITION OF THE MECHANISM

UPPER PART	Chrome-plated brass
BODY MECHANISM	Brass
COMPATIBLE FITTINGS	Handle valve | Valve w/ handle mechanism

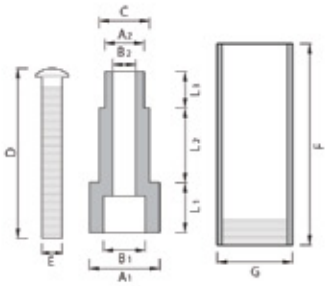

REF	A_1	A_2	B_1	B_2	C	D	E	F	G	L_1	L_2	L_3			
	(mm)												(kg)	(un)	
KIT2032-CP	13	8	8	4	10	37	4	54	24	10	15	7	0,064	10	150

CONCEALED VALVE KIT EXTENDER

COMPOSITION OF THE MECHANISM

UPPER PART	Chrome-plated brass
BODY MECHANISM	Brass
COMPATIBLE FITTINGS	Full valve mechanism exetender Concealed valve

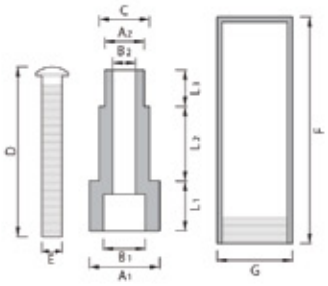

REF	A_1	A_2	B_1	B_2	C	D	E	F	G	L_1	L_2	L_3			
	(mm)												(kg)	(un)	
KIT2032-RO	13	8	7	4	10	37	4	66	24	12	13	10	0,078	10	150

VALVE W/ CONCEALED MECHANISM

COMPOSITION OF THE MECHANISM

UPPER PART	Nickel-plated brass
MIRROR	Chrome-plated stainless steel
COMPATIBLE FITTINGS	Stop valve

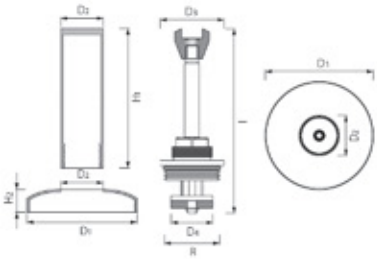

REF	Ø	D_1	D_2	D_3	D_4	H_1	H_2	I	R			
	(in)	(mm)							(in)	(kg)	(un)	
BSPCN12	1/2"	64	24	24	18	41	12	60-70	1/2"	0,12	10	100
BSPCN34	3/4"	64	24	28	22	41	12	60-70	3/4"	0,151	10	100
BSPCN1	1"	64	24	37	27	41	12	60-70	1"	0,168	10	50

VALVE W/ HANDLE MECHANISM

REF	Ø		
	(in)	(un)	
BSPCP12	1/2"	10	100
BSPCP34	3/4"	10	100
BSPCP1	1"	10	50

COMPOSITION OF THE MECHANISM

HANDLE	Nickel-plated brass
MIRROR	Chrome-plated stainless steel
COMPATIBLE FITTINGS	Stop valve

WHEEL MECHANISM

REF	Ø		
	(in)	(un)	
BSPCFLO12	1/2"	10	100
BSPCFLO34	3/4"	10	100
BSPCFLO1	1"	10	50

COMPOSITION OF THE MECHANISM

HANDLE	PP-R 100
MECHANISM	Brass CW617N
COMPATIBLE FITTINGS	Stop valve

FEMALE FLANGE ADAPTOR

CHARACTERISTICS

COLOUR	Green | Blue
RAW MATERIAL	PP-R 100
TYPE OF WELDING	Socket
STANDARDS	EN ISO 15874 | DIN 16962
COMPATIBLE SYSTEMS	HELISYSTEM | ROMAFASER | ROMAFASER ANTI-UV ROMAKLIMA | ROMAFASER CT | ROMAKLIMA CT

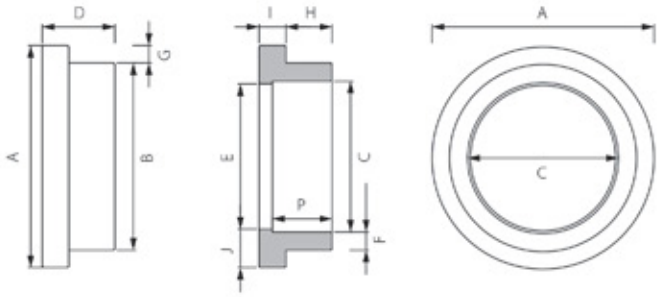

REF	Ø	A	B	C	Tol. C	D	E	F	G	H	I	J	P				COLOUR	
	(mm)													(kg)	(un)			
P-PBRIDA40H	40	77	50	37	+0,4	26	38	7	13	16	10	20	21	0,028	25	100	✓	✓
P-PBRIDA50H	50	87	64	49	+0,5	30	48	8	11	18	12	19	24	0,066	15	60	✓	✓
P-PBRIDA63H	63	100	77	61	+0,6	34	60	9	11	20	14	20	28	0,090	10	30	✓	✓
P-PBRIDA75H	75	113	94	73	+0,5	36	72	11	9	23	13	20	31	0,122	4	20	✓	✓
P-PBRIDA90H	90	133	114	89	+1,5	42	88	13	9	26	16	22	33	0,200	4	20	✓	✓
P-PBRIDA110H	110	159	134	106	+1,7	49	108	15	12	30	19	27	37	0,305	2	10	✓	✓
P-PBRIDA125H	125	188	166	124	+2,2	52	124	21	11	32	20	32	40	0,521	1	10	✓	

FLANGE ADAPTOR XL

CHARACTERISTICS

COLOUR	Green
RAW MATERIAL	PP-R 100 | PP-RCT 125
TYPE OF WELDING	Butt Welding | Electrofusion
STANDARDS	EN ISO 15874 | DIN 16962
COMPATIBLE SYSTEMS	ROMAFASER | ROMAKLIMA | ROMAFASER CT ROMAKLIMA CT

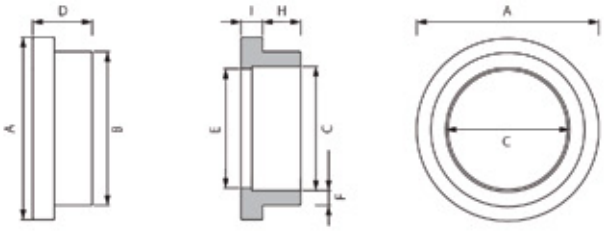

MODEL A

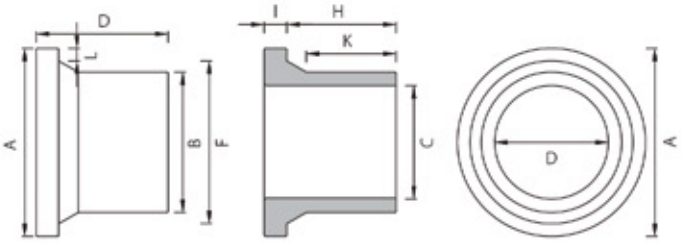

MODEL B

REF	Ø	A	B	C	D	E	F	H	I	K	MODEL	SDR				COLOUR
	(mm)												(kg)	(un)		
P-PBRIDA160H[3]	160	221	160	118	188	151	21	50	25	-	A	7,4	1,040	1	1	✓
CTPBRIDA200H	200	268	200	162	188	162	236	155	33	121	B	11	2,740	1	1	✓
CTPBRIDA250H	250	323	250	204	226	204	288	187	39	145	B	11	4,580	1	1	✓
CTPBRIDA315H[2]	315	369	315	257	248	257	340	209	39	160	B	11	7,300	1	1	✓
CTPBRIDA355H[2]	355	429	355	283	152	284	375	110	42	56	B	11	6,660	1	1	✓
CTPBRIDA400H[2]	400	478	400	324	138	324	426	91	47	40	B	11	8,020	1	1	✓
CTPBRIDA1315H	315	-	-	-	-	-	-	-	-	-	-	17	-	1	1	✓
CTPBRIDA1355H	355	-	-	-	-	-	-	-	-	-	-	17	-	1	1	✓
CTPBRIDA1400H	400	-	-	-	-	-	-	-	-	-	-	17	-	1	1	✓

[2] Limited to existing stock. | [3] Not suitable for electrofusion.

FLANGE FOR VALVE

CHARACTERISTICS

COLOUR	Green
RAW MATERIAL	PP-R 100 | PP-RCT 125
TYPE OF WELDING	Butt Welding | Electrofusion
STANDARDS	EN ISO 15874 | DIN 16962
COMPATIBLE SYSTEMS	ROMAFASER | ROMAKLIMA | ROMAFASER CT ROMAKLIMA CT

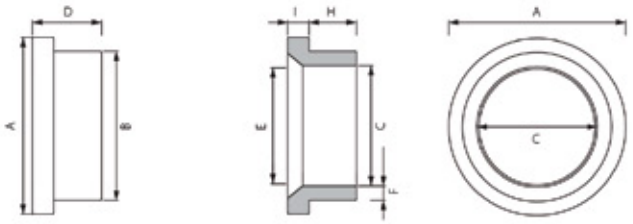

MODEL A

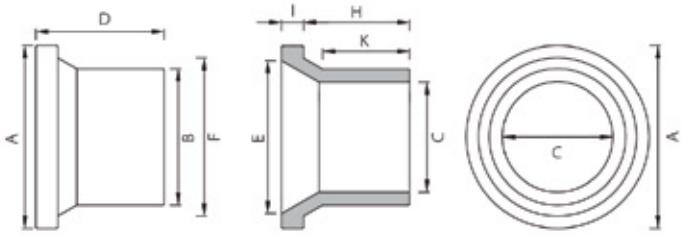

MODEL B

REF	Ø	A	B	C	D	E	F	H	I	K	MODEL	SDR				COLOUR
	(mm)												(kg)	(un)		
P-PBRIDA160-VB[3]	160	221	160	118	188	151	21	50	25	-	A	7,4	0,900	1	1	✓
CTPBRIDA200-VB	200	268	200	162	188	162	236	155	33	121	B	11	2,580	1	1	✓
CTPBRIDA250-VB	250	323	250	204	226	204	288	187	39	145	B	11	4,340	1	1	✓
CTPBRIDA315-VB[2]	315	369	315	257	248	257	340	209	39	160	B	11	6,920	1	1	✓
CTPBRIDA355-VB[2]	355	429	355	283	152	284	375	110	42	56	B	11	5,960	1	1	✓
CTPBRIDA400-VB[2]	400	478	400	324	138	324	426	91	47	40	B	11	7,220	1	1	✓
CTPBRIDA1315-VB	315	-	-	-	-	-	-	-	-	-	-	17	-	1	1	✓
CTPBRIDA1355-VB	355	-	-	-	-	-	-	-	-	-	-	17	-	1	1	✓
CTPBRIDA1400-VB	400	-	-	-	-	-	-	-	-	-	-	17	-	1	1	✓

[2] Limited to existing stock. | [3] Not suitable for electrofusion.

STEEL FLANGE

CHARACTERISTICS

RAW MATERIAL	Steel Flange ST 37.2, Zinc Coated
STANDARDS	DIN EN1092 | ISO 15494:2015
COMPATIBLE SYSTEMS	HELISYSTEM | ROMAFASER | ROMAFASER ANTI-UV ROMAKLIMA | ROMAFASER CT | ROMAKLIMA CT

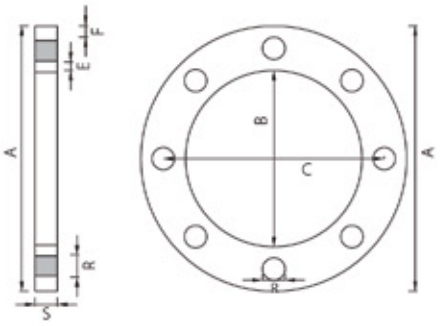

REF	Ø	A	B	C	E	F	R	S	HOLES		
	(mm)								(un)	(kg)	(un)
BRIDA40	40	140	52	100	16	11	18	16	4	1,489	1
BRIDA50	50	150	65	110	14	11	18	15	4	1,620	1
BRIDA63	63	165	78	125	14	11	18	18	4	2,221	1
BRIDA75	75	185	95	145	16	12	18	18	4	2,653	1
BRIDA90	90	200	115	160	14	11	18	20	8	2,940	1
BRIDA110	110	220	135	180	13	12	18	21	8	3,440	1

COATED STEEL FLANGE

CHARACTERISTICS

RAW MATERIAL	Carbon Steel Flange ST 37.2, coated with Fiberglass reinforced Polypropylene
STANDARDS	DIN EN1092 | ISO 15494:2015
COMPATIBLE SYSTEMS	HELISYSTEM | ROMAFASER | ROMAFASER ANTI-UV ROMAKLIMA | ROMAFASER CT | ROMAKLIMA CT

MODEL A

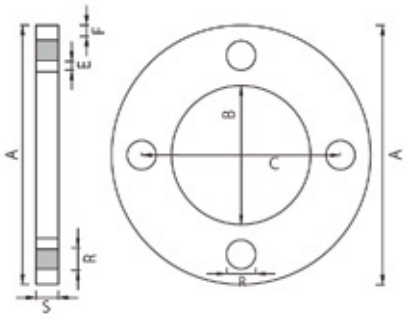

MODEL B

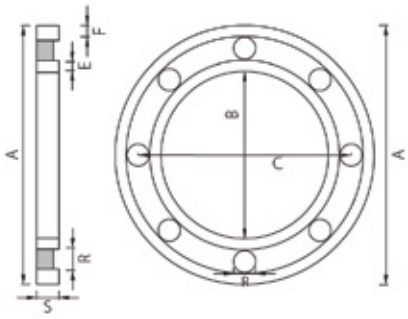

REF	Ø	A	B	C	E	F	R	S	HOLES			
	(mm)								(un)	(kg)		(un)
BRIDA40-REV	40	142	53	100	15	12	18	18	4	0,671	A	1
BRIDA50-REV	50	152	66	110	13	12	18	18	4	0,767	A/B	1
BRIDA63-REV	63	172	78	125	15	15	18	20	4	1,058	A/B	1
BRIDA75-REV	75	189	95	145	16	13	18	22	4	1,222	A/B	1
BRIDA90-REV	90	200	115	160	14	11	18	20	8	1,100	A/B	1
BRIDA110-REV	110	223	135	179	13	13	18	20	8	1,442	A/B	1
BRIDA125-REV	125	250	168	209	12	12	18	24	8	2,192	A/B	1
BRIDA160-REV	160	287	178	240	20	13	22	24	8	2,740	A/B	1
BRIDA200-REV	200	344	235	295	19	13	23	20	8	4,560	A/B	1
BRIDA250-REV	250	406	288	350	20	17	22	30	12	7,080	A/B	1
BRIDA315-REV	315	465	341	400	19	21	23	34	12	9,780	A/B	1
BRIDA355-REV	355	517	381	460	29	17	23	39	16	15,620	A/B	1
BRIDA400-REV	400	571	429	515	30	15	27	45	16	20,060	A/B	1

CLAMP

CHARACTERISTICS

COLOUR	Green | Blue
RAW MATERIAL	PP-R 100
STANDARDS	EN ISO 15874 | DIN 16962
COMPATIBLE SYSTEMS	ROMAFASER | ROMAKLIMA | ROMAFASER CT ROMAKLIMA CT

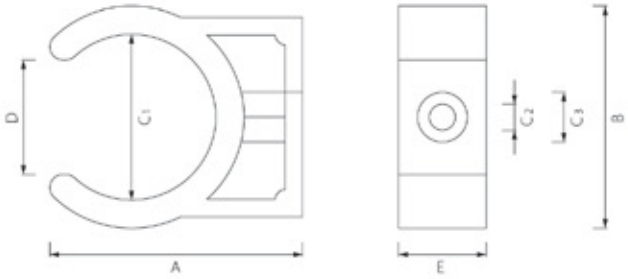

REF	Ø	A	B	C_1	C_2	C_3	D	E				COLOUR	
	(mm)								(kg)	(un)			
P-AB20	20	20	26	19	10	6	14	8	0,004	100	1000	✓	✓
P-AB25	25	36	32	24	10	6	17	13	0,006	100	800	✓	✓
P-AB32	32	45	41	31	10	6	24	16	0,011	50	500	✓	✓
P-AB40	40	57	51	38	10	6	26	20	0,020	30	240	✓	✓

END CAP

CHARACTERISTICS

COLOUR	Green | Blue
RAW MATERIAL	PP-R 100
TYPE OF WELDING	Socket
STANDARDS	EN ISO 15874 | DIN 16962
COMPATIBLE SYSTEMS	HELISYSTEM | ROMAFASER | ROMAFASER ANTI-UV ROMAKLIMA | ROMAFASER CT | ROMAKLIMA CT

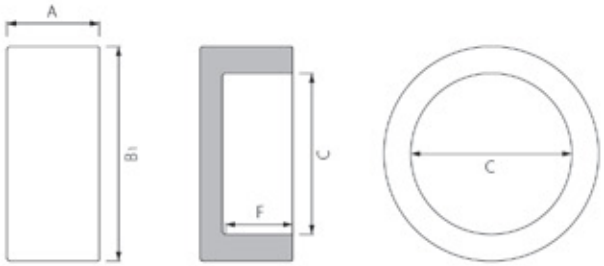

REF	Ø	A	B_1	C min	F				COLOUR	
			(mm)			(kg)	(un)			
P-242020	20	20	28	19,2	15	0,013	50	500	✓	✓
P-242025	25	22	34	24,2	16	0,017	50	500	✓	✓
P-242032	32	26	42	31,1	18	0,023	30	240	✓	✓
P-242040	40	29	53	39,0	21	0,036	20	200	✓	✓
P-242050	50	32	68	48,9	24	0,065	10	100	✓	✓
P-242063	63	42	87	61,9	28	0,150	5	50	✓	✓
P-242075	75	43	100	73,7	30	0,186	2	40	✓	✓
P-242090	90	53	122	88,6	33	0,346	1	24	✓	✓
P-2420110	110	61	144	108,4	37	0,504	1	10	✓	✓
P-2420125	125	68	162	122,4	40	0,702	1	10	✓	

END CAP XL

CHARACTERISTICS

COLOUR	Green
RAW MATERIAL	PP-R 100
TYPE OF WELDING	Butt Welding | Electrofusion
STANDARDS	EN ISO 15874 | DIN 16962
COMPATIBLE SYSTEMS	ROMAFASER | ROMAKLIMA | ROMAFASER CT ROMAKLIMA CT

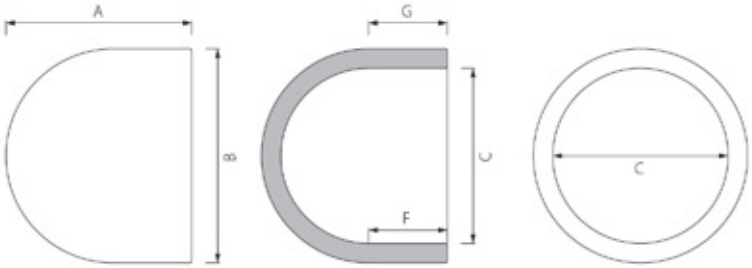

REF	Ø	A	B	C	F	G	SDR				COLOUR
	(mm)							(kg)	(un)		
P-2420160 [1]	160	73	161	115,2	47	-	7,4	0,910	1	8	✓
CT2420200	200	180	200	164	96	120	11	1,980	1	1	✓
CT2420250	250	217	250	205	115	135	11	3,120	1	1	✓
CT2420315	315	256	315	258	143	161	11	-	1	1	✓
CT2421315	315	-	-	-	-	-	17	-	1	1	✓
CT2421355	355	-	-	-	-	-	17	-	1	1	✓
CT2421400	400	-	-	-	-	-	17	-	1	1	✓

[1] Not suitable for electrofusion

THREADED END CAP

CHARACTERISTICS

COLOUR	Green
RAW MATERIAL	PP-R 100
TYPE OF WELDING	Socket
STANDARDS	EN ISO 15874 | DIN 16962
COMPATIBLE SYSTEMS	HELISYSTEM | ROMAFASER | ROMAFASER ANTI-UV ROMAKLIMA | ROMAFASER CT

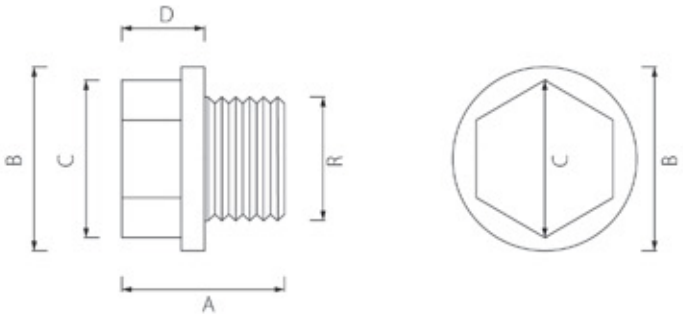

REF	Ø	A	B	C	D	R				COLOUR
	(in)	(mm)				(in)	(kg)	(un)		
P-237020	1/2"	25	28	21	13	1/2"	0,008	100	1000	✓
P-237025	3/4"	28	32	24	13,5	3/4"	0,013	100	300	✓

BRIDGE

CHARACTERISTICS

COLOUR	Green | Blue
RAW MATERIAL	PP-R 100
TYPE OF WELDING	Socket
STANDARDS	EN ISO 15874 | DIN 16962
COMPATIBLE SYSTEMS	HELISYSTEM | ROMAFASER | ROMAFASER ANTI-UV ROMAKLIMA | ROMAFASER CT

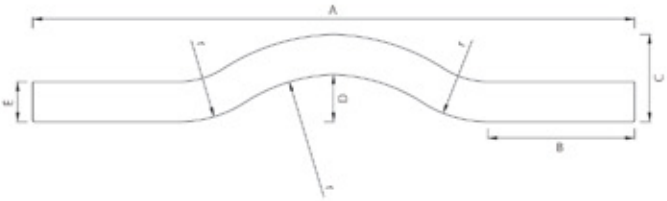

REF	Ø	A	B	C	D	E	R				COLOUR	
	(mm)							(kg)	(un)			
P-UC20	20	300	80	42	22	20	61,2	0,065	10	100	✓	✓
P-UC25	25	330	75	52	27	25	81,8	0,098	10	60	✓	✓
P-UC32	32	380	80	64	34	32	97,5	0,16	5	40	✓	✓

REPAIR PIN

CHARACTERISTICS

COLOUR	Green | Blue
RAW MATERIAL	PP-R 100
TYPE OF WELDING	Socket
STANDARDS	EN ISO 15874 | DIN 16962
COMPATIBLE SYSTEMS	HELISYSTEM | ROMAFASER | ROMAFASER ANTI-UV ROMAKLIMA | ROMAFASER CT | ROMAKLIMA CT

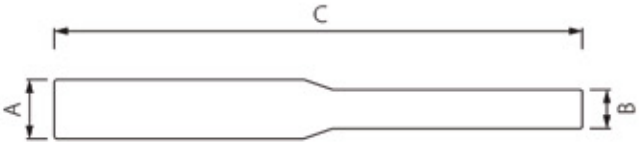

REF	Ø	A	B	C				COLOUR	
	(mm)				(kg)	(un)			
P-4501	7/11	11,4	7,5	101,5	0,008	50	1000	✓	✓

BIM

Heliroma

BIM

BIM – Building Information Modelling – It's a revolutionary work methodology of planning, coordinate and follow-up on the multiple phases of the existence of a building.

This methodology contains many advantages regarding material waste reduction and economical and time efficiency. With BIM it's possible to eliminate many construction site errors due to systems incompatibilities given that they were previously taken care of.

To apply BIM you need a tool such as Autodesk Revit®. A multidimensional platform containing one building model with all engineering and architectural components built-in. Therefore, HELIROMA is aiming towards having all main product families in Revit® for maximum productivity of its customers.

To access to our BIM library, please contact our technical department.

How to use our products in Revit®:

1. Open both project and Heliroma files in Revit®;

2. In the project file, got to "Manage";

3. Click "Transfer Project Standards";

4. Transfer "Pipe Systems" from Heliroma file to the project file;

5. Close HELIROMA's file;

6. You're Ready.

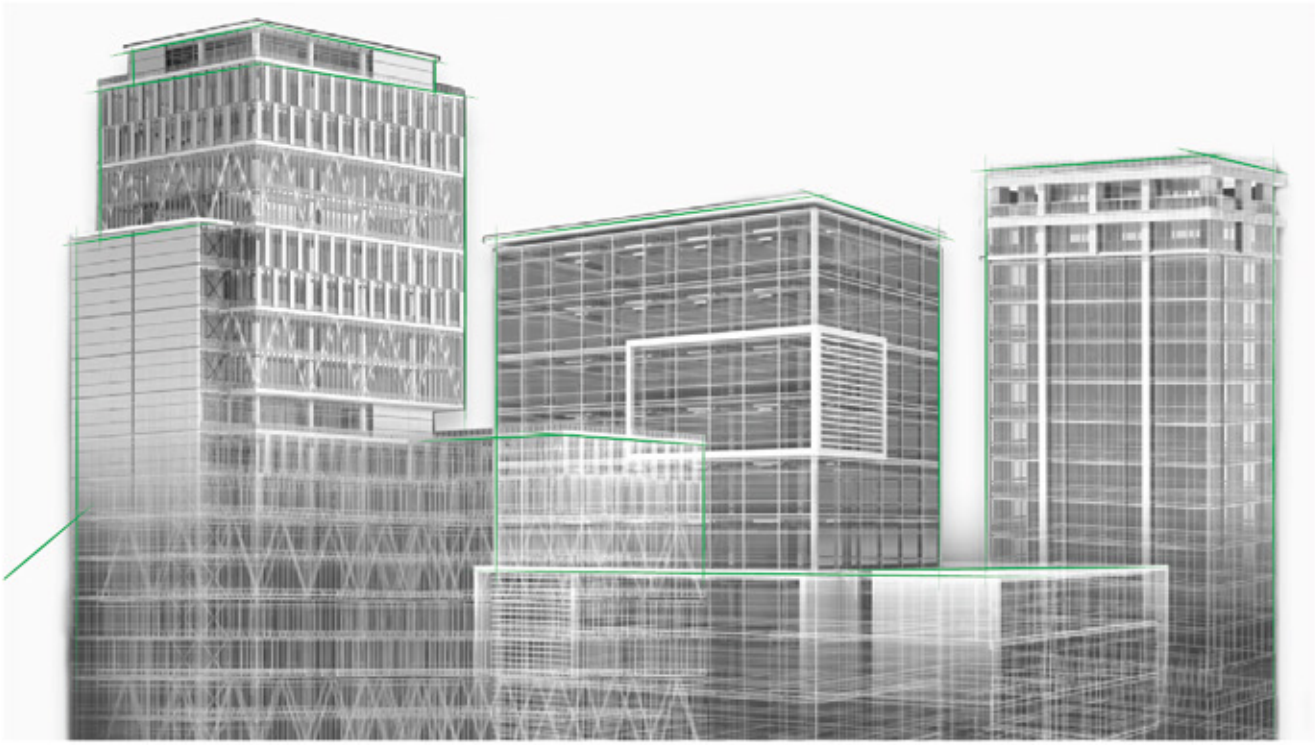

Heliroma®